This drawing is the property of VAT.
Without the written consent of VAT , it must
not be copied or distributed to a third person

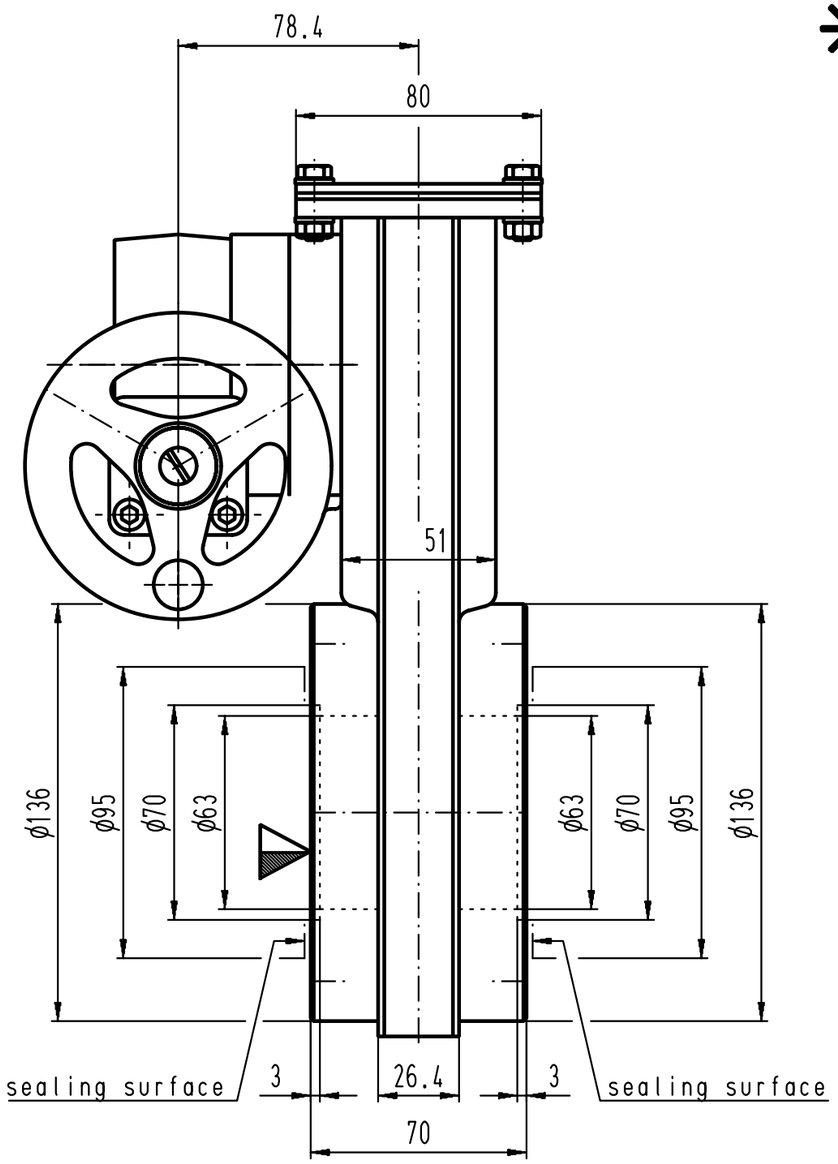

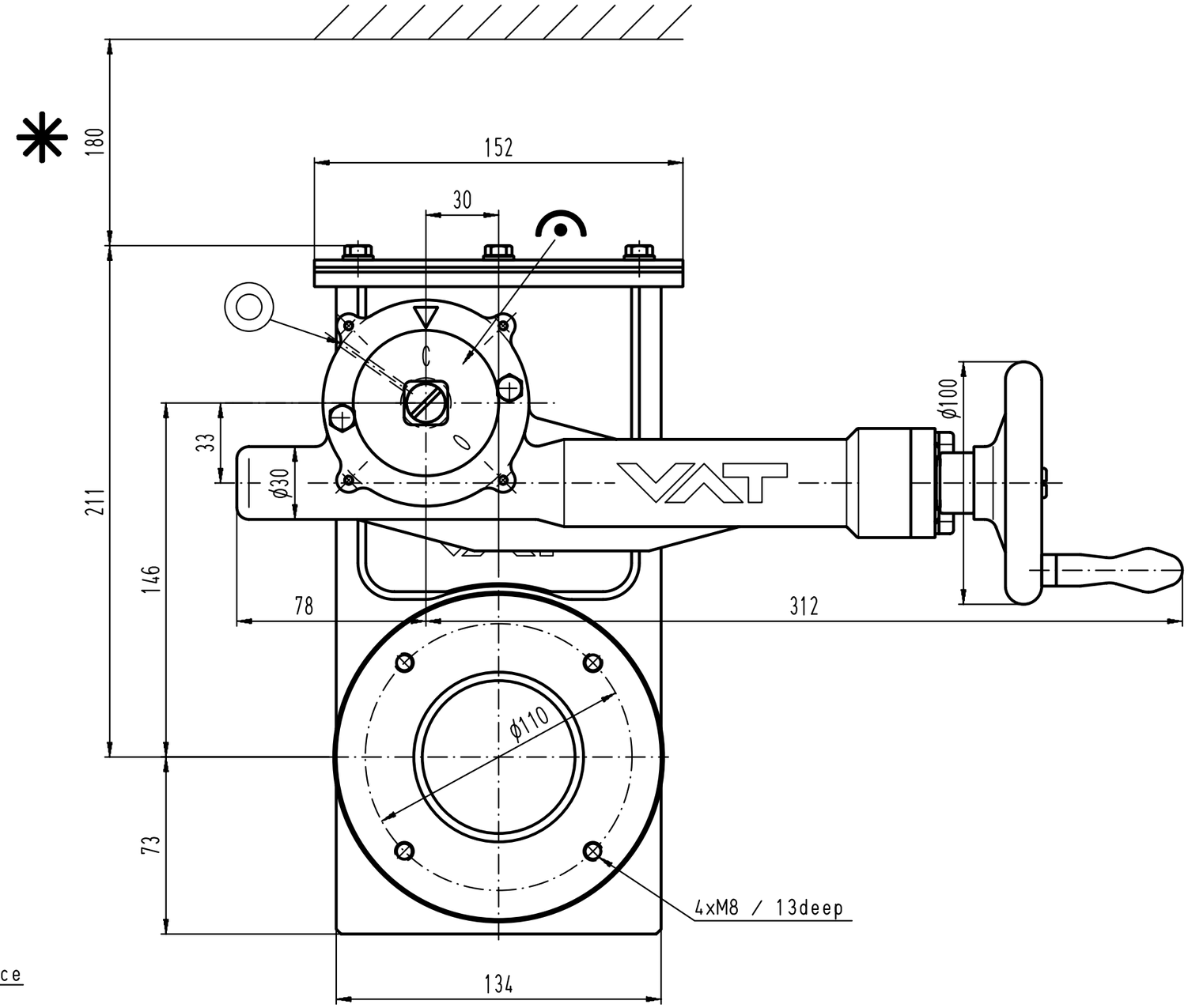

- Seat side
- Comp. air connection
- Electrical connection
- Leak detection port
- Mech. pos. indication
- Position indicator
- Required for dismantling
- Emergency actuation
- For attachment
- Bake-out area
- Differential pumping port

HV Gate Valve

manual actuator, hand wheel

VAT Vakuumventile AG
CH-9469 Haag , Switzerland
Tel ++41 81 7716161 Fax ++41 81 7714830

Date: 27.05.2002
Name: MCO

Series	Ordering No.
14	14036-PE01-0004

Projection E

DN	Flange
63	ISO-F

Dimensional Drawing

230353

Rev.

Revision			
Code			
Date			
Name			

MB VATMDA