This drawing is the property of VAT.

Revision

Customer number

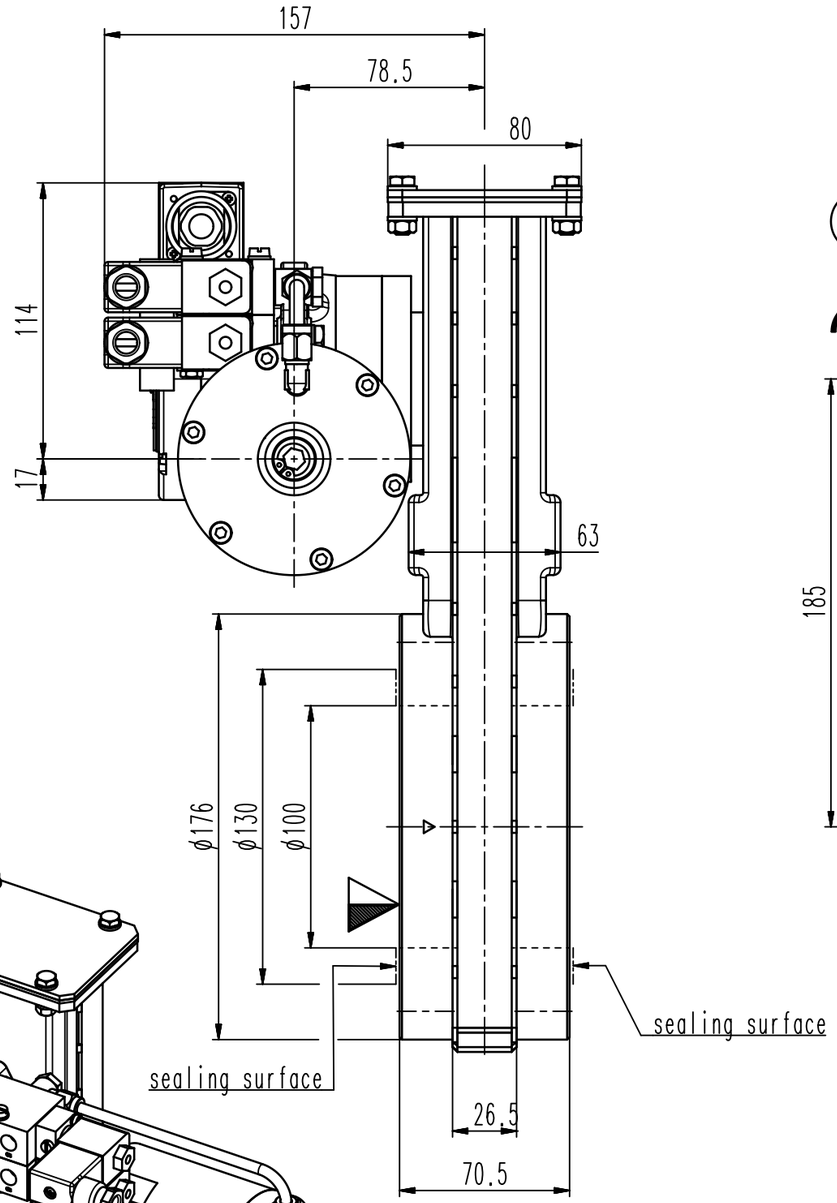

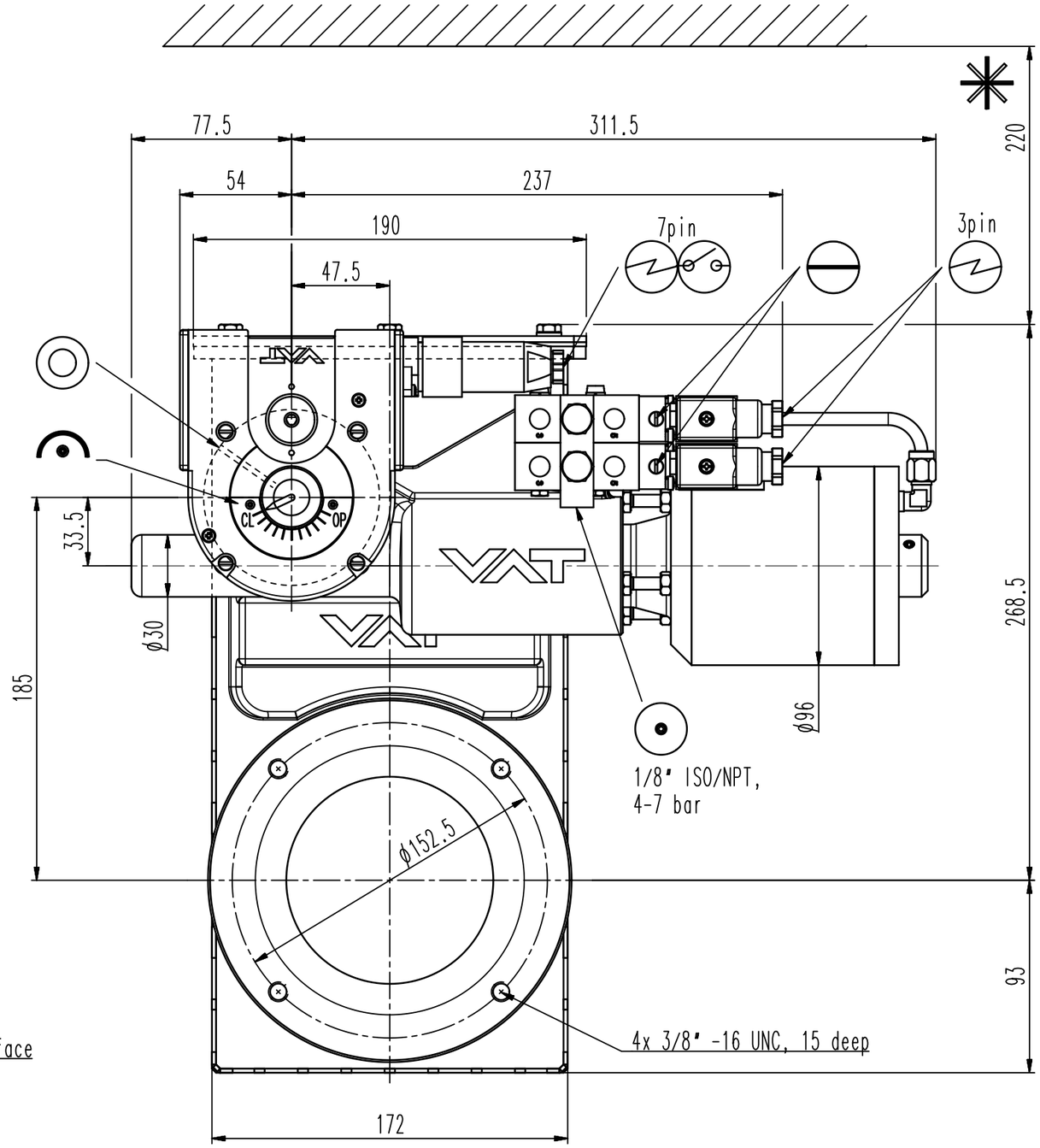

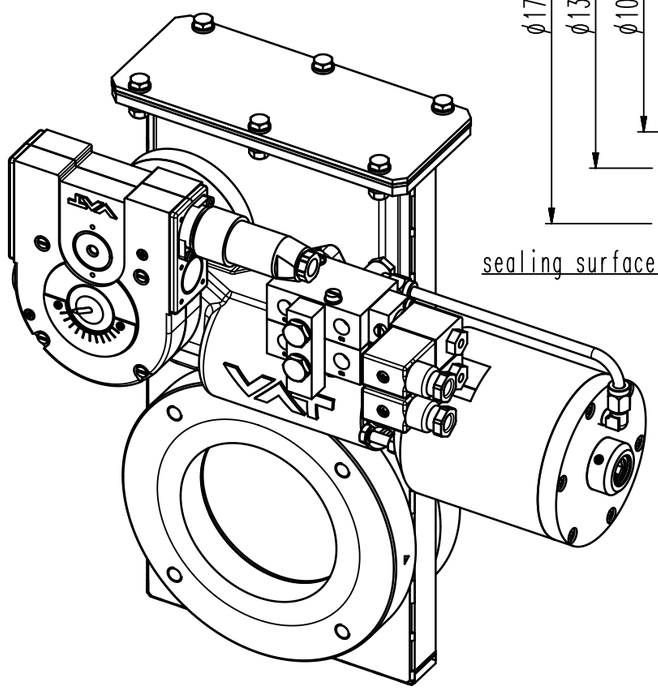

- Seat side
- Comp. air connection
- Electrical connection
- Leak detection port
- Mech. pos. indication
- Position indicator
- Required for dismantling
- Emergency actuation
- For attachment
- Bake-out area
- Differential pumping port

HV gate valve

Series	140
Ordering No.	14040-TE48-0001
Projection E	
DN	100
Flange	ASA-LP
Dimensional Drawing	1053977
Rev.	

VAT Vakuumventile AG
CH-9469 Haag , Switzerland
Tel ++41 81 7716161 Fax ++41 81 7714830

Rev.-Date: 03.09.20
Visa: FRRO