This drawing is the property of VAT.

Revision

Customer number

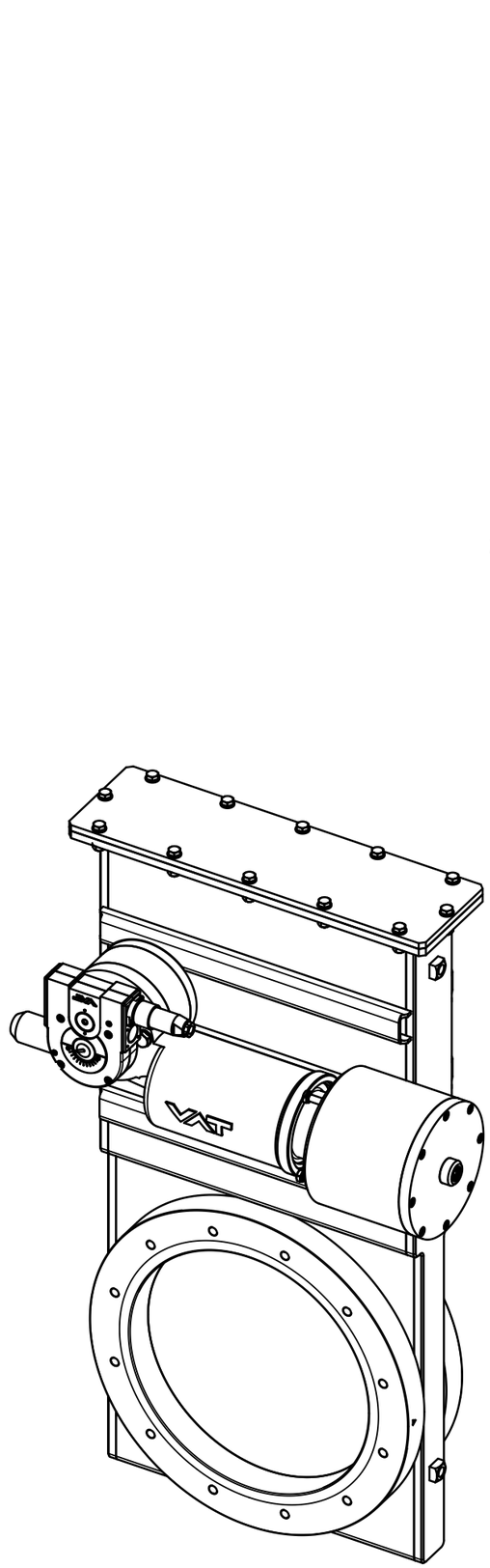

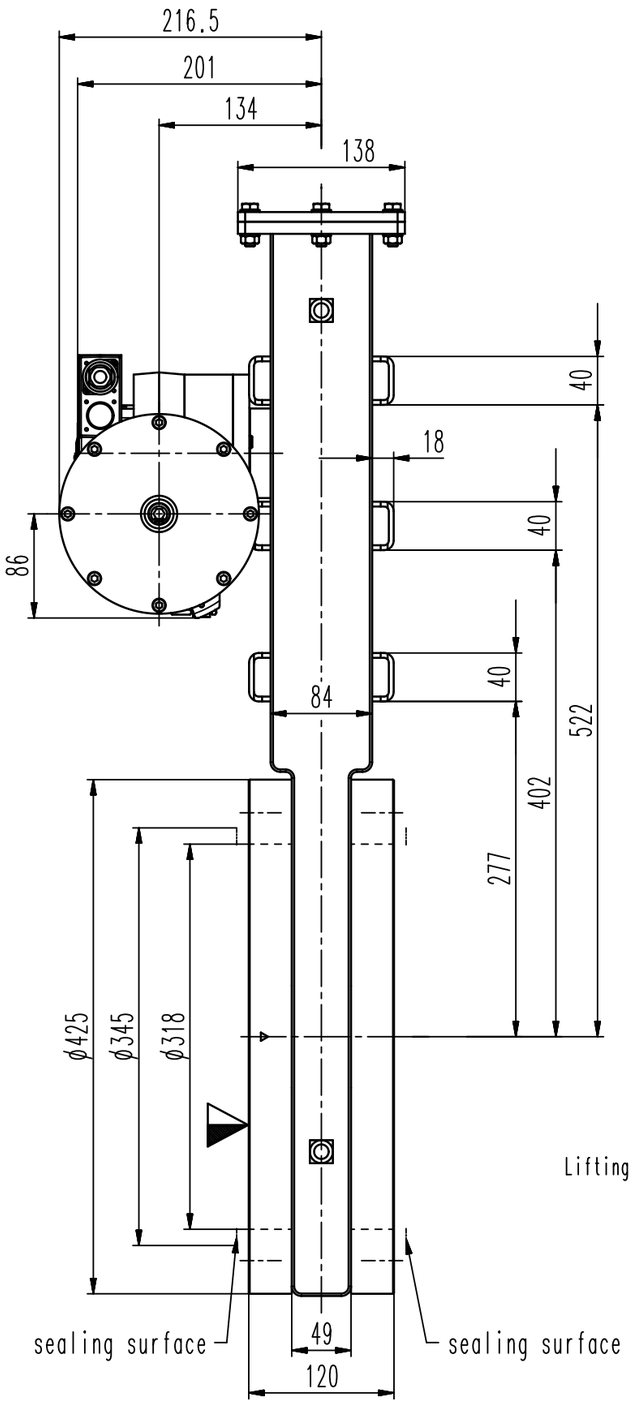

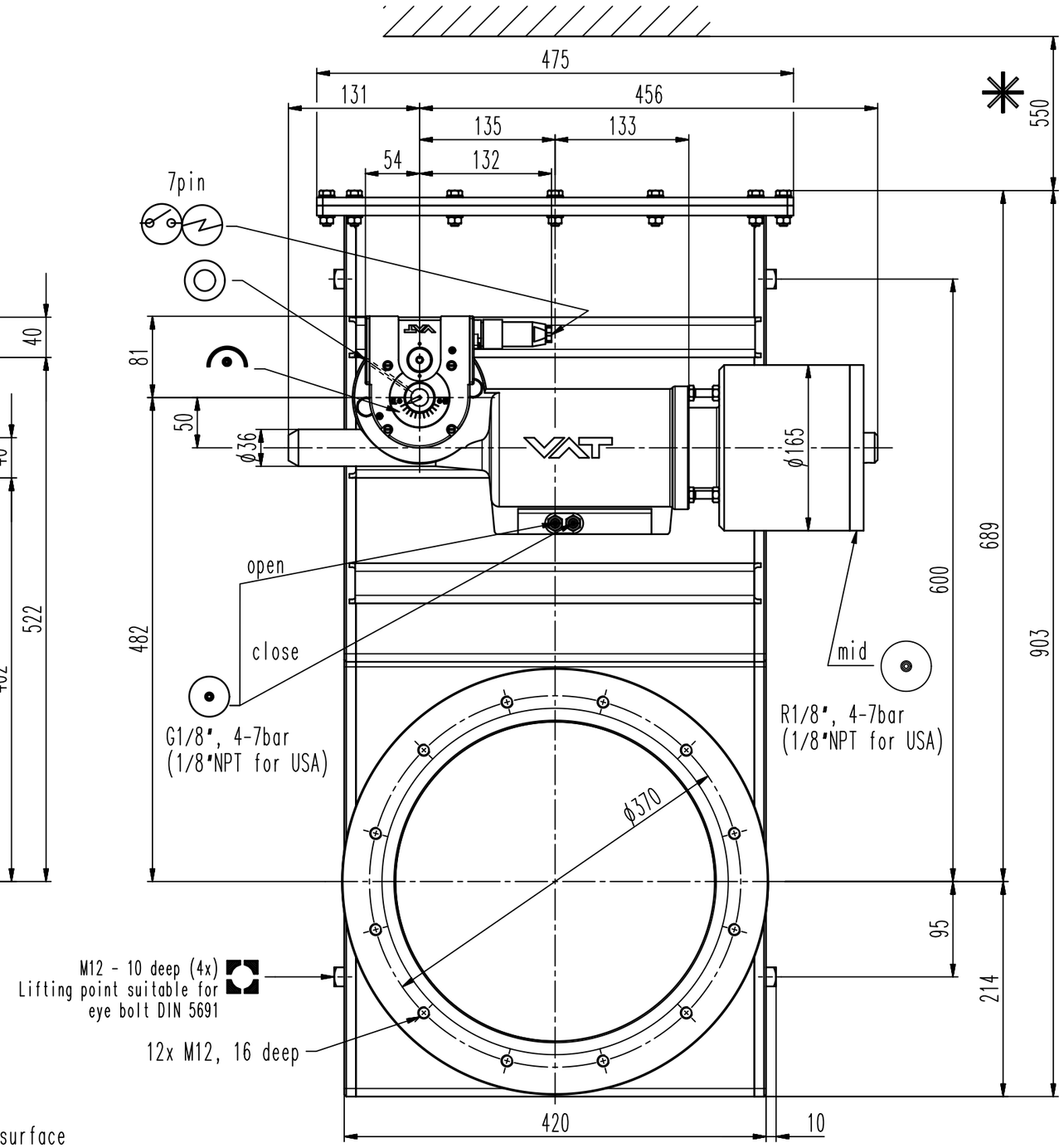

- Seat side
- Comp. air connection
- Electrical connection
- Leak detection port
- Mech. pos. indication
- Position indicator
- Required for dismantling
- Emergency actuation
- For attachment
- Bake-out area
- Differential pumping port

HV gate valve

Series	Ordering No.
140	14050-JE28-0001

Projection E

DN	Flange
320	JIS

VAT Vakuumventile AG
CH-9469 Haag , Switzerland
Tel ++41 81 7716161 Fax ++41 81 7714830

Rev.-Date: 10.08.16
Visa: WEF

Dimensional Drawing

855524

Rev.