This drawing is the property of VAT.

Revision

Customer number

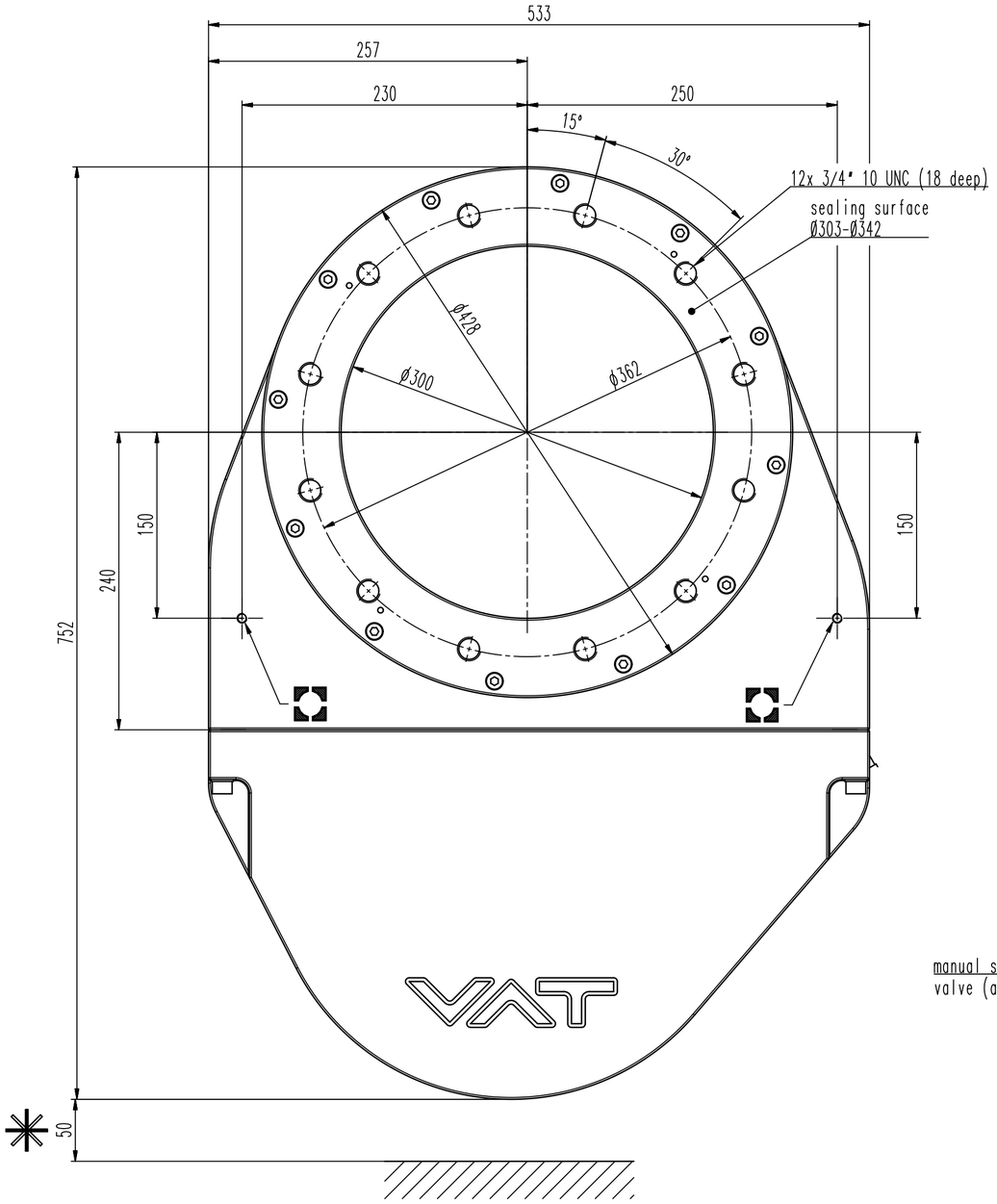

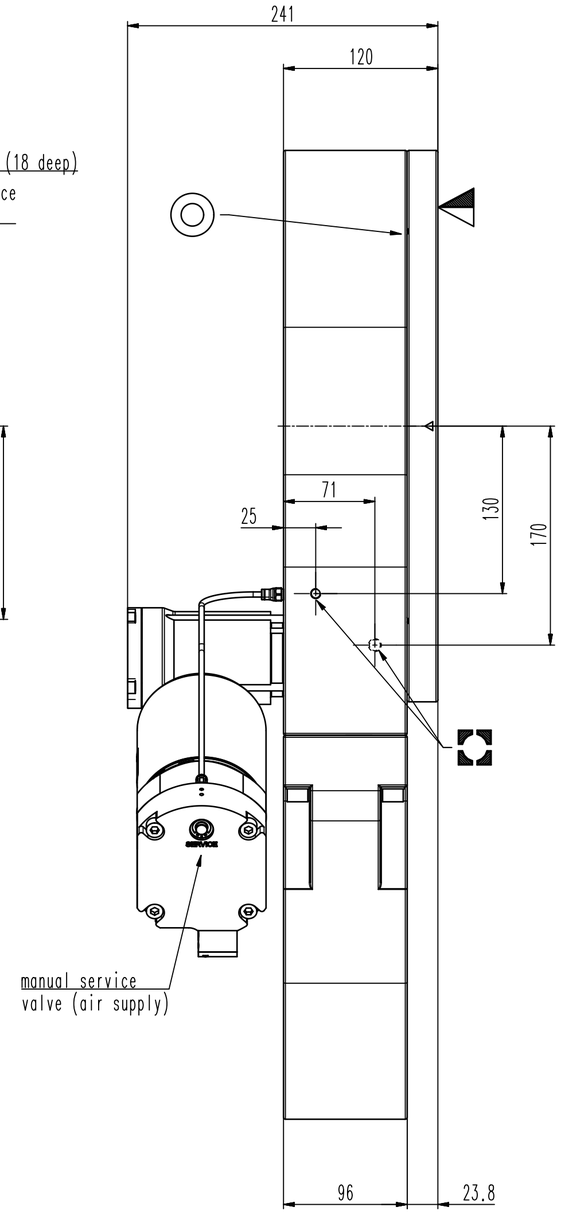

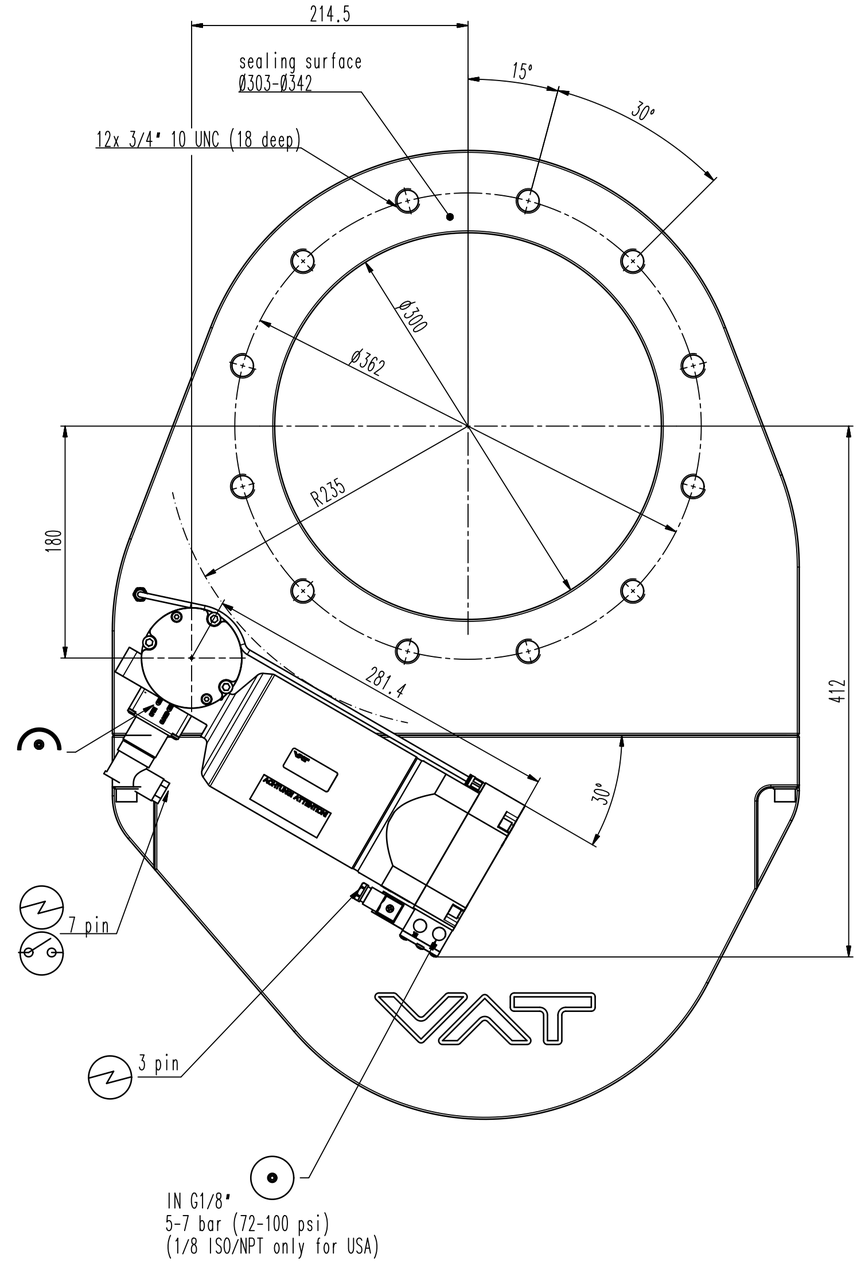

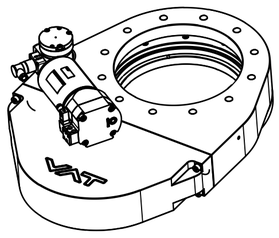

M8 12 deep (4x)

- Seat side
- Comp. air connection
- Electrical connection
- Leak detection port
- Mech. pos. indication
- Position indicator
- Required for dismantling
- Emergency actuation
- For attachment
- Bake-out area
- Differential pumping port

Pendulum valve

Series 162	Ordering No. 16250-TA41-0001		
Projection E	DN 320	Flange ASA-LP	
VAT Vakuumventile AG, CH-9469 Haag, Switzerland, Tel ++41 81 7716161 Fax ++41 81 7714830	Rev.-Date: 17.07.06, Visa: TRM	Dimensional Drawing	321843 Rev.

user ideasadm at 20.07.2012, 17:57:14

VALMDA