This drawing is the property of VAT.

Revision

Customer number

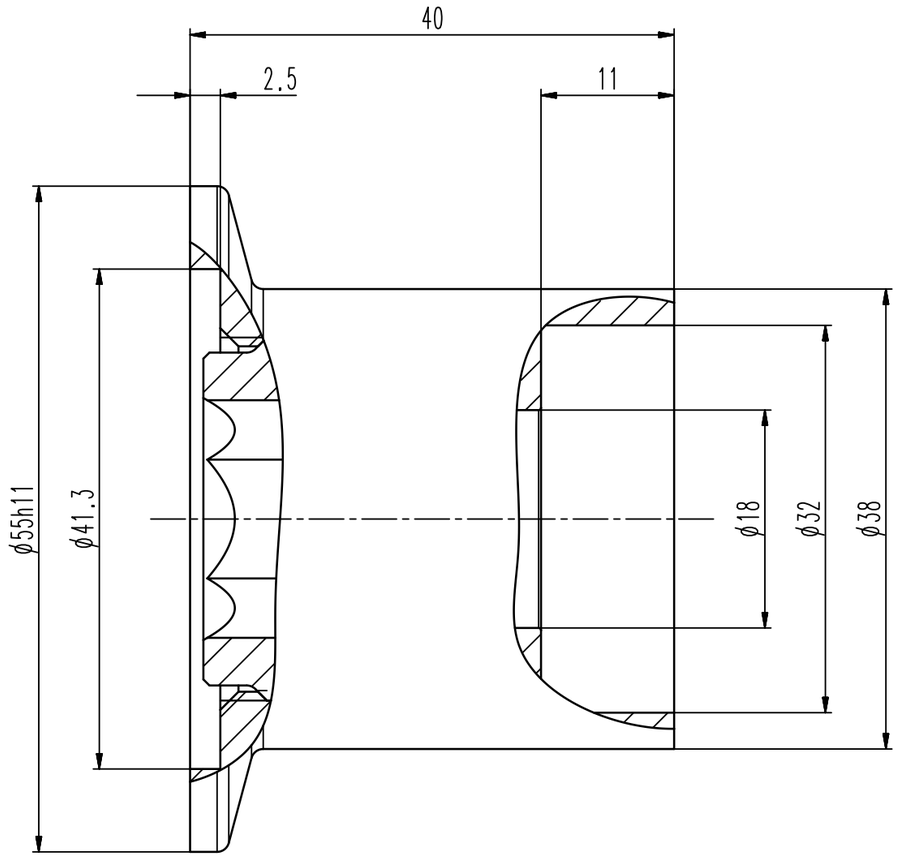

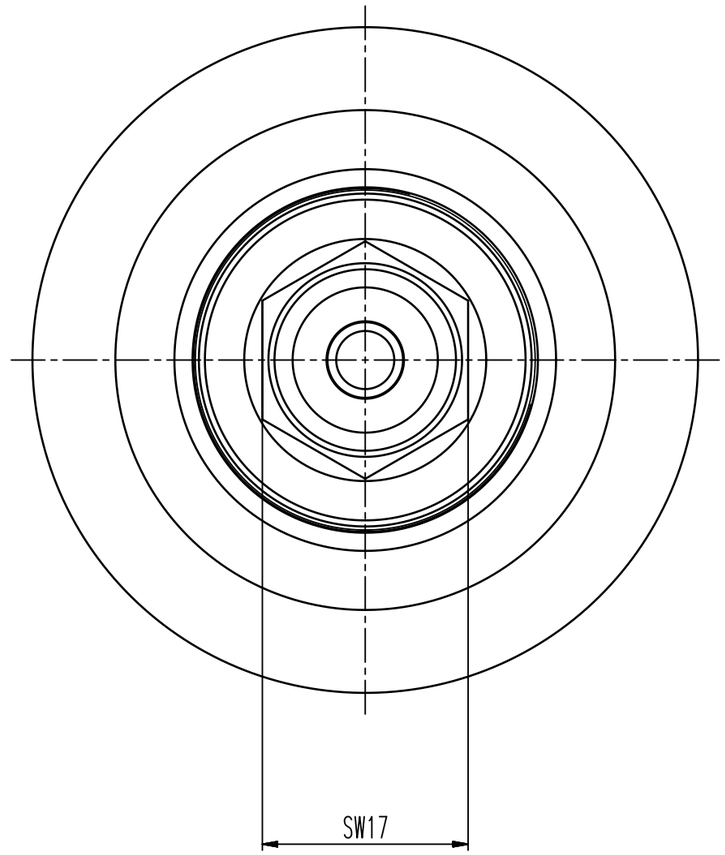

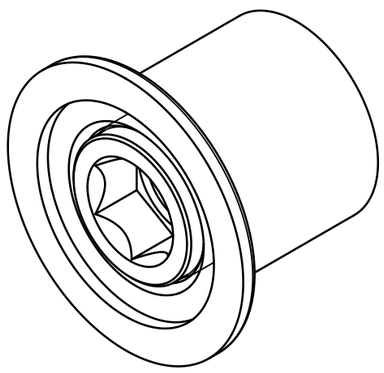

- Seat side
- Comp. air connection
- Electrical connection
- Leak detection port
- Mech. pos. indication
- Position indicator
- Required for dismantling
- Emergency actuation
- For attachment
- Bake-out area
- Differential pumping port

Pump-out port system

Series	230
Ordering No.	23032-KEPS-0002
Projection E	
DN	40
Flange	ISO-KF
Dimensional Drawing	
960820	
Rev.	

VAT Vakuumventile AG
CH-9469 Haag , Switzerland
Tel ++41 81 7716161 Fax ++41 81 7714830

Rev.-Date: 22.11.18
Visa: GOED