This drawing is the property of VAT.

Revision

Customer number

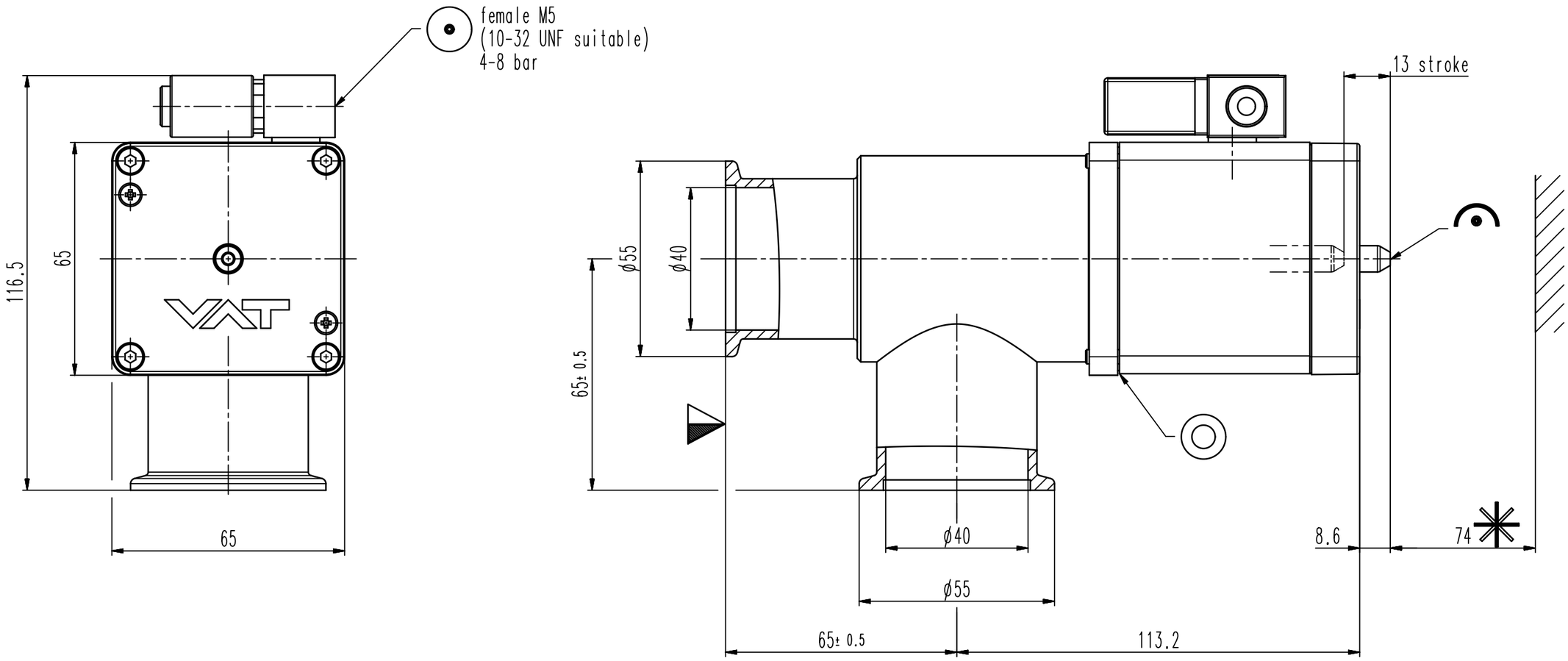

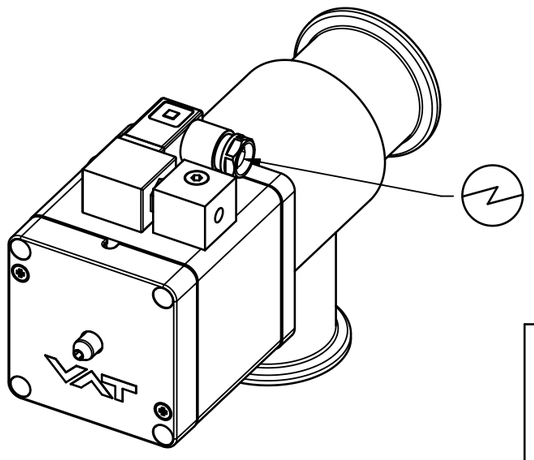

- Seat side
- Comp. air connection
- Electrical connection
- Leak detection port
- Mech. pos. indication
- Position indicator
- Required for dismantling
- Emergency actuation
- For attachment
- Bake-out area
- Differential pumping port

Vacuum angle valve

Series	244
Ordering No.	24432-KE32-0001
Projection E	
DN	40
Flange	ISO-KF

VAT Vakuumventile AG
CH-9469 Haag , Switzerland
Tel ++41 81 7716161 Fax ++41 81 7714830

Rev.-Date: 09.07.13
Visa: RIA

Dimensional Drawing

701814

Rev.