This drawing is the property of VAT.

Revision

Customer number

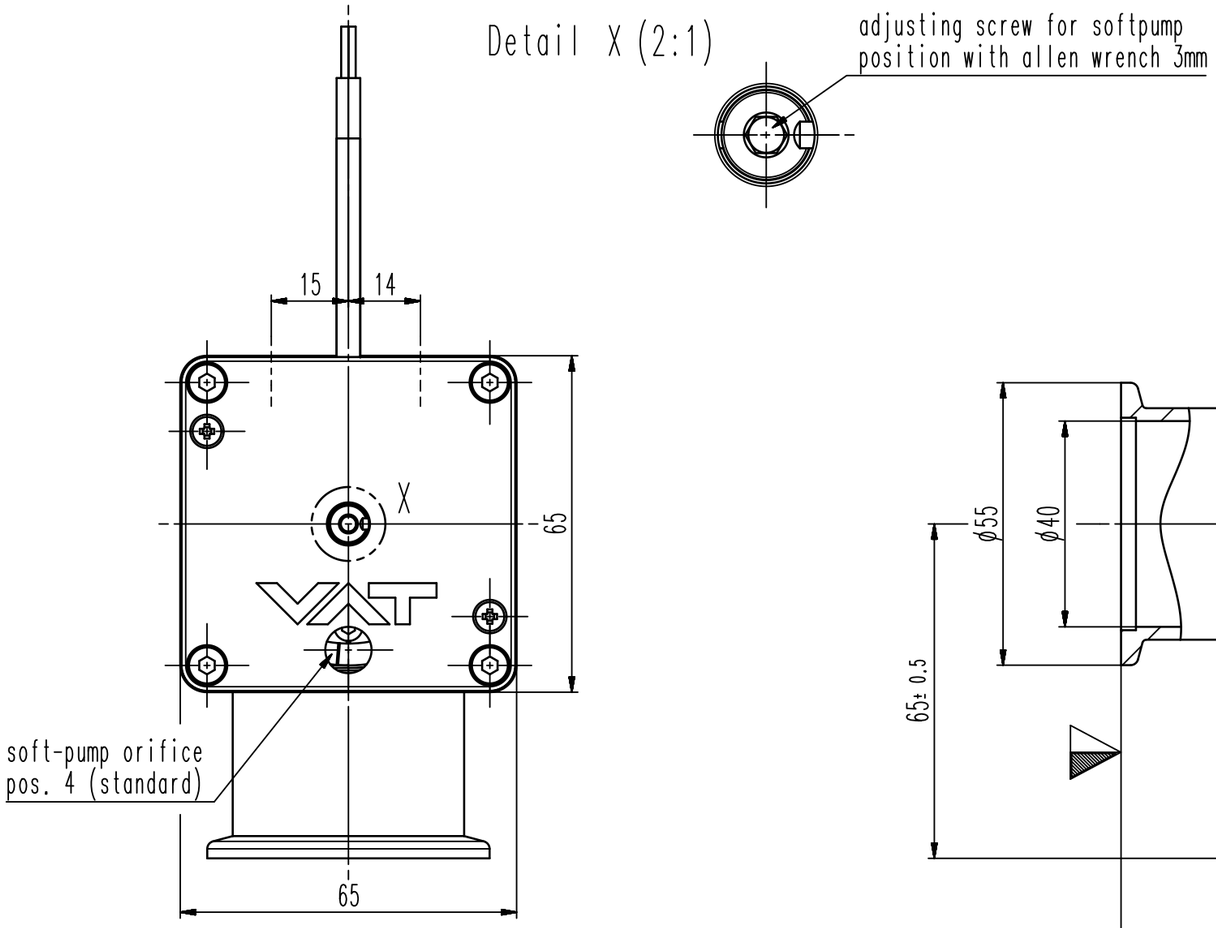

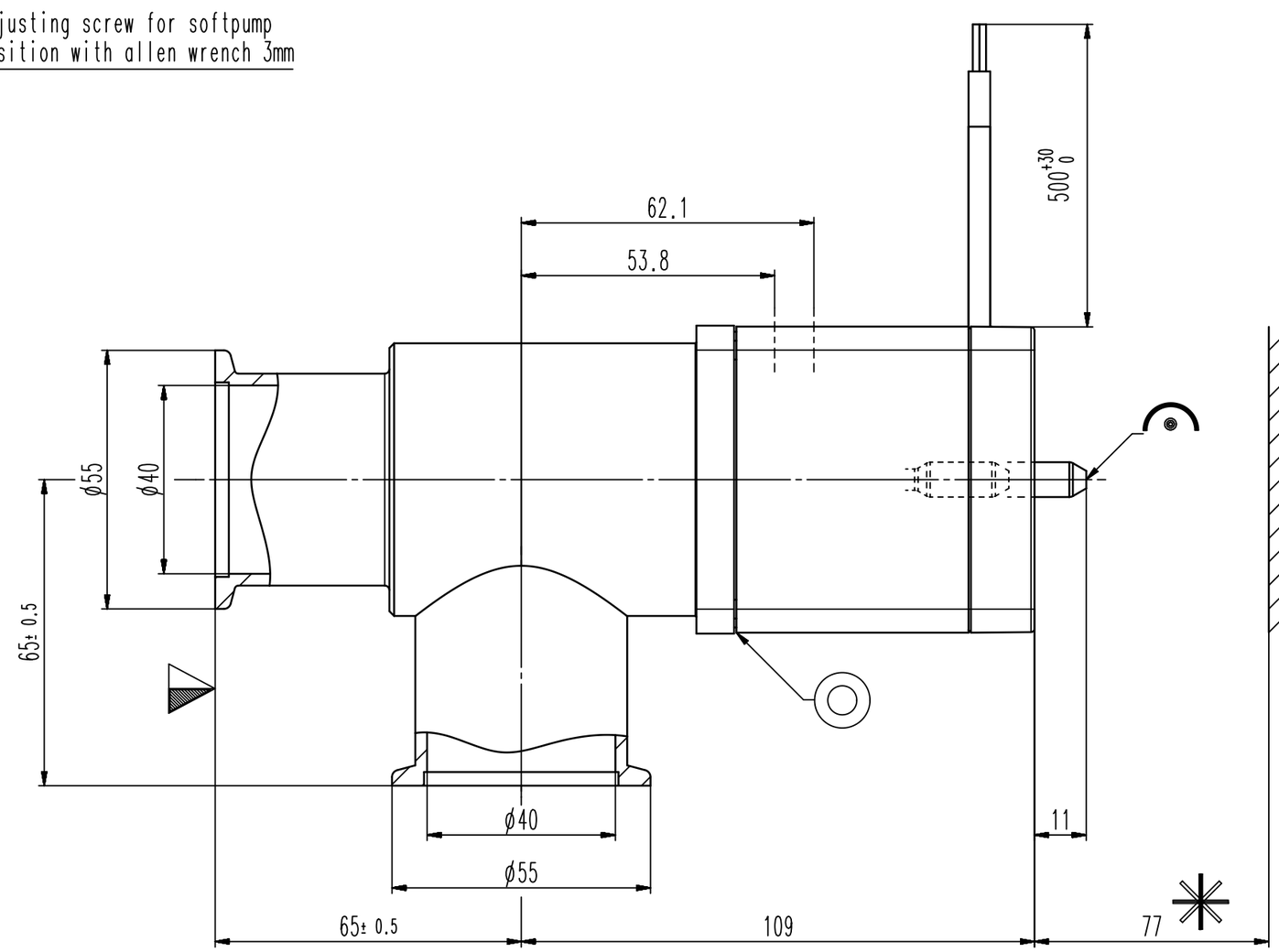

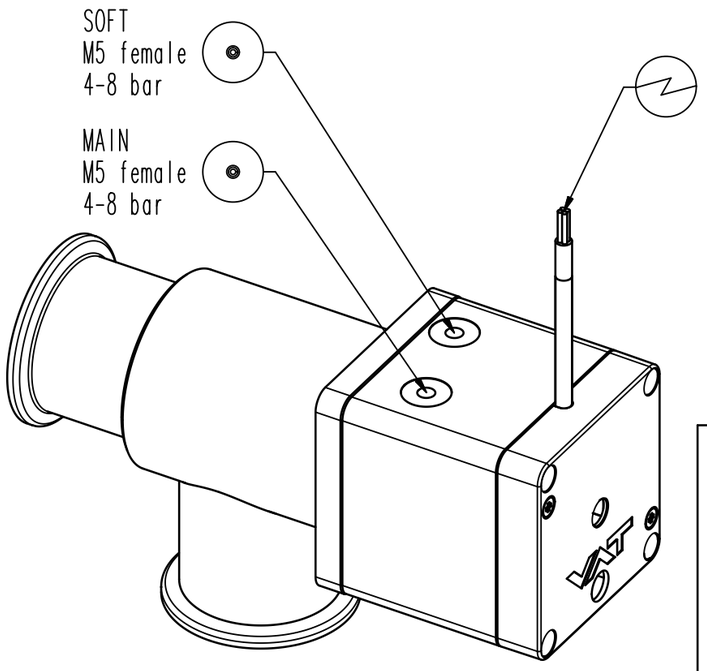

- Seat side
- Comp. air connection
- Electrical connection
- Leak detection port
- Mech. pos. indication
- Position indicator
- Required for dismantling
- Emergency actuation
- For attachment
- Bake-out area
- Differential pumping port

Angle valve with soft-pump function

Series	Ordering No.
290	29032-KE21-0001

Projection E

DN	Flange
40	ISO-KF

VAT Vakuumventile AG
CH-9469 Haag , Switzerland
Tel ++41 81 7716161 Fax ++41 81 7714830

Date: 24.04.06
Name: BCH

Dimensional Drawing

315265

Rev. A