This drawing is the property of VAT.

Customer number

Revision

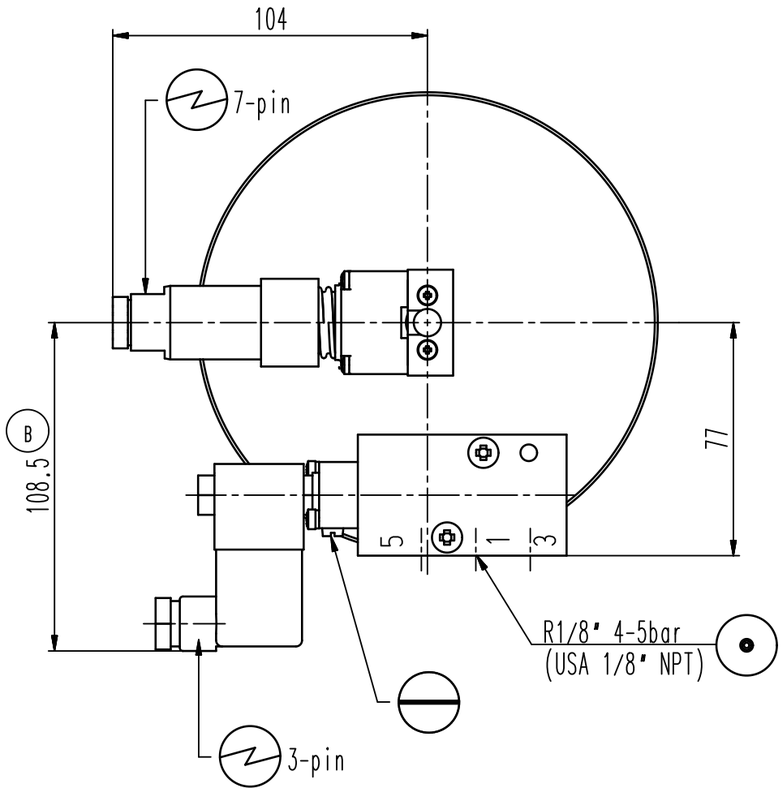

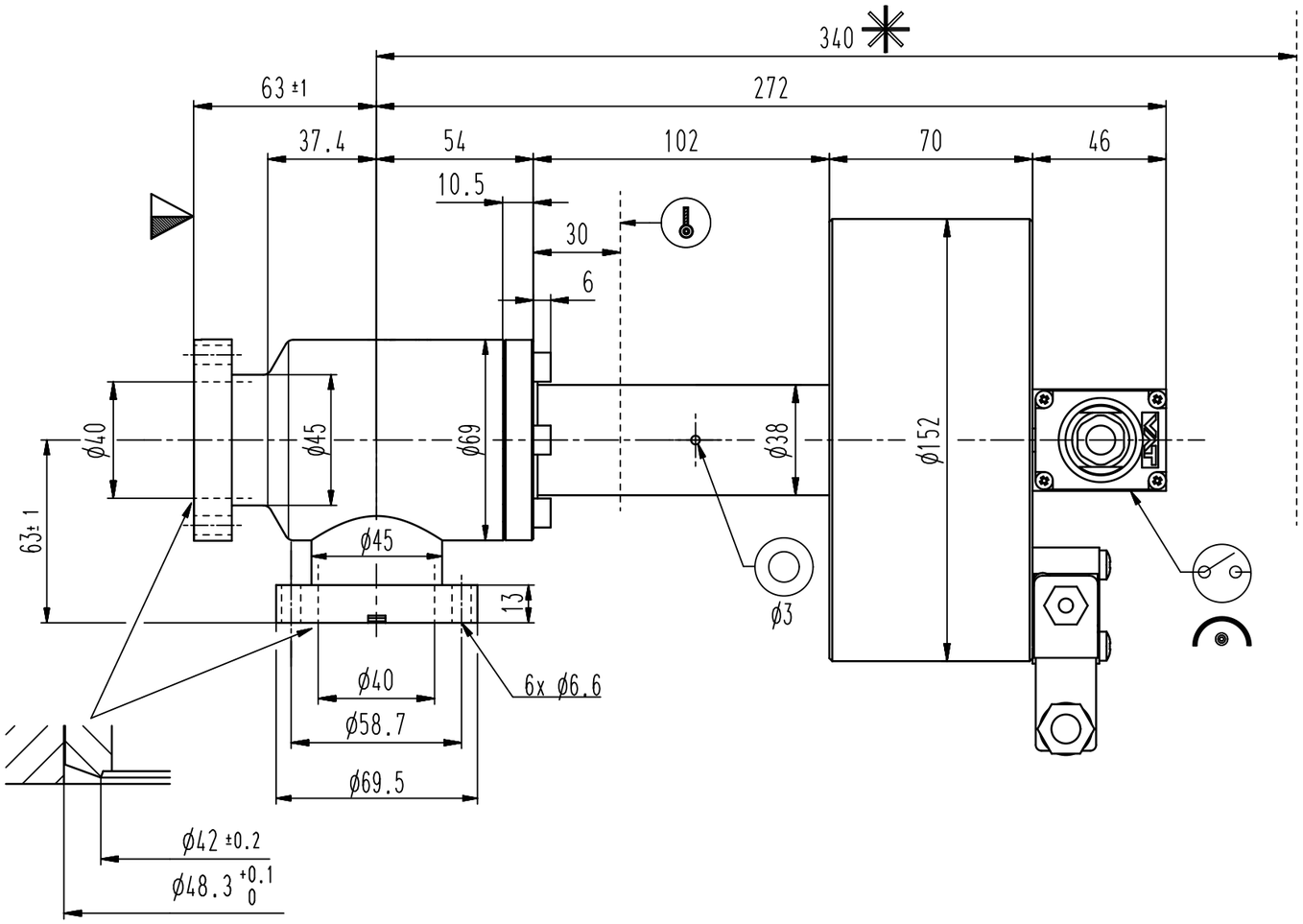

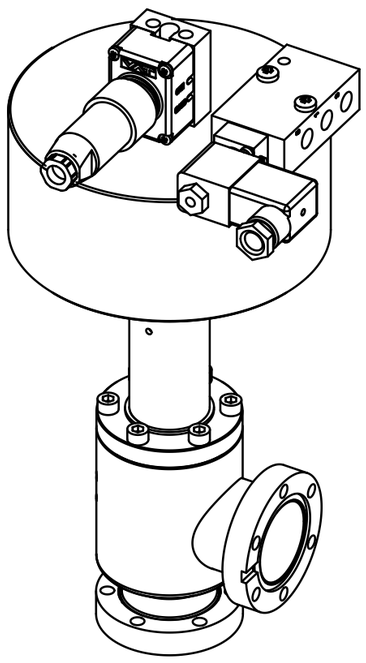

- Seat side
- Comp. air connection
- Electrical connection
- Leak detection port
- Mech. pos. indication
- Position indicator
- Required for dismantling
- Emergency actuation
- For attachment
- Bake-out area
- Differential pumping port

All-metal angle valve

Series	Ordering No.
571	57132-GE44-0004

Projection E

DN	Flange
40	CF-R

VAT Vakuumventile AG
CH-9469 Haag , Switzerland
Tel ++41 81 7716161 Fax ++41 81 7714830

Rev.-Date: 04.08.08
Visa: DUM/

Dimensional Drawing

236793

Rev. B