This drawing is the property of VAT.

Revision

Customer number

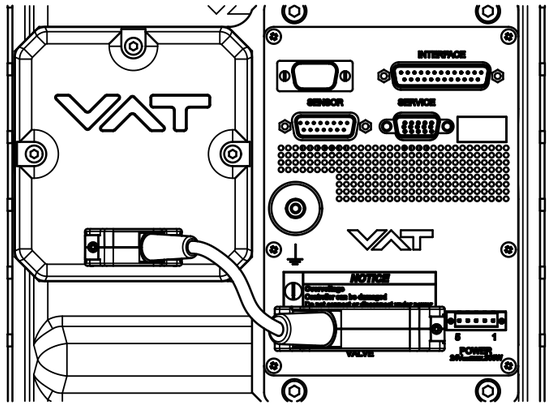

Connectors		
	Description	Type
POWER	Power input	Weidmüller SL3.5 male
SENSOR	Sensor input Sensor power supply	DB-15 female
INTERFACE	RS 232 interface	DB-25 female

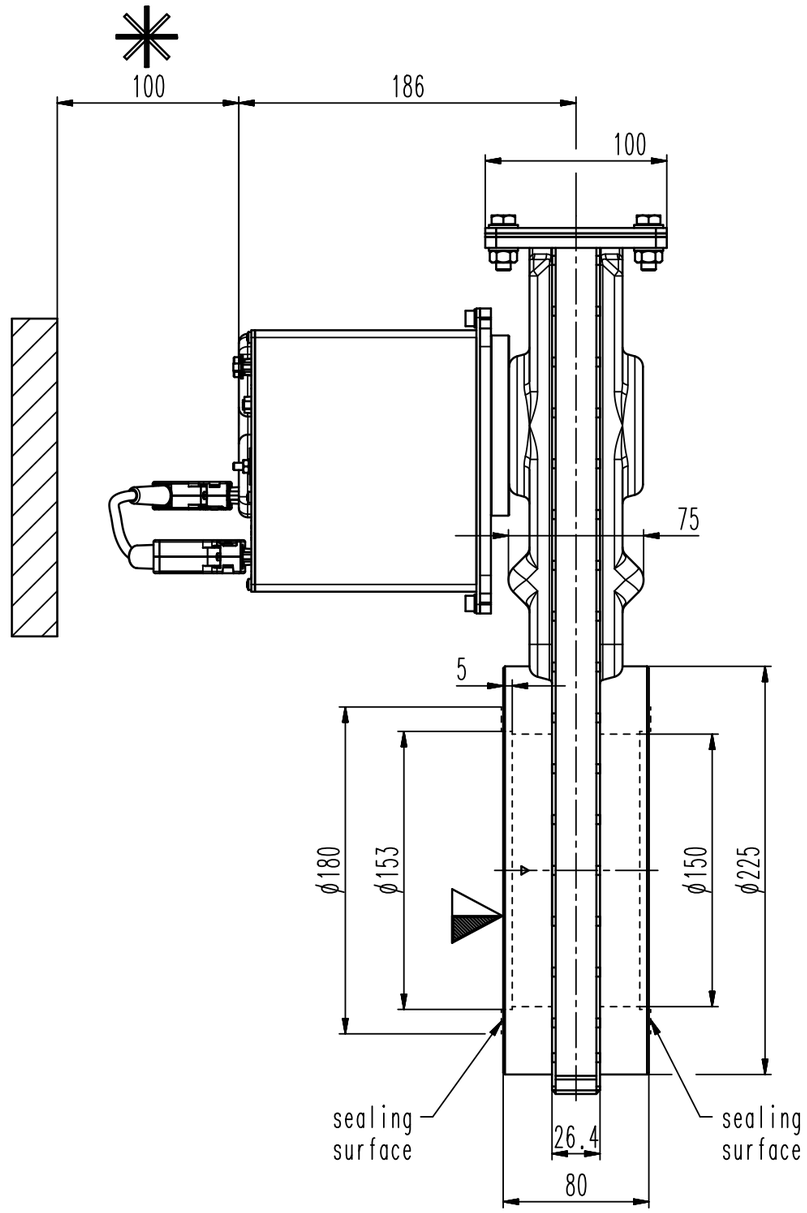

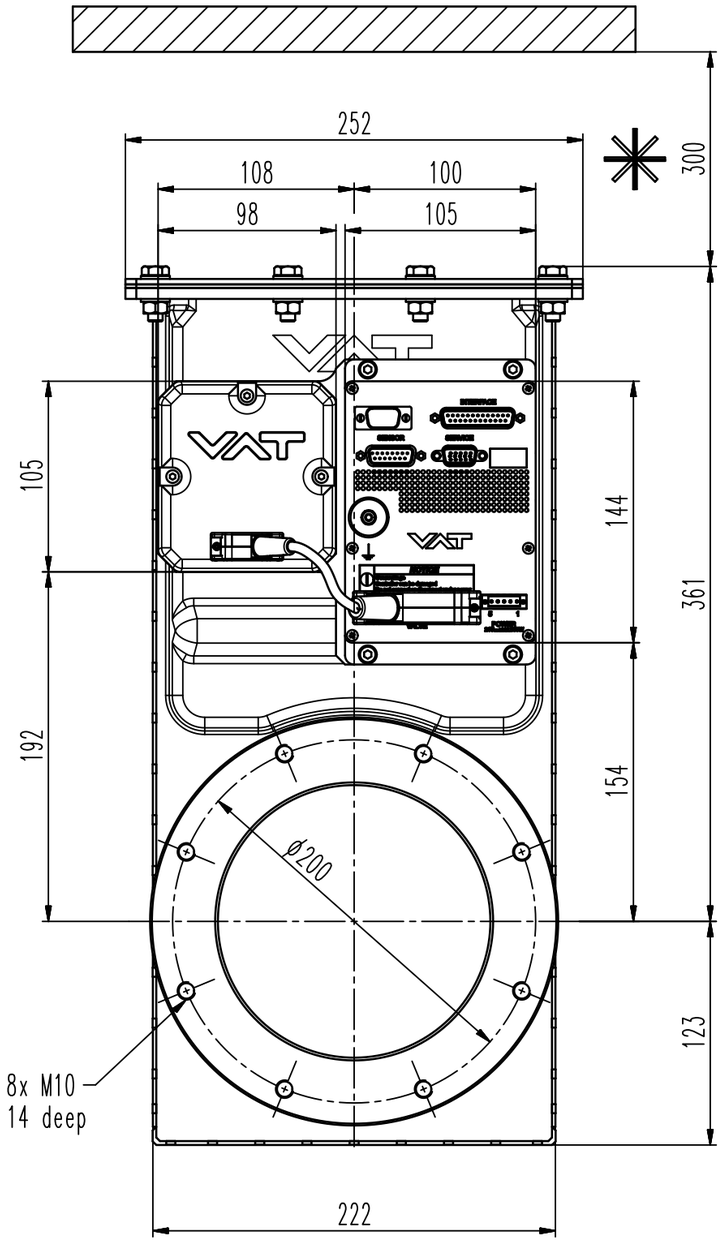

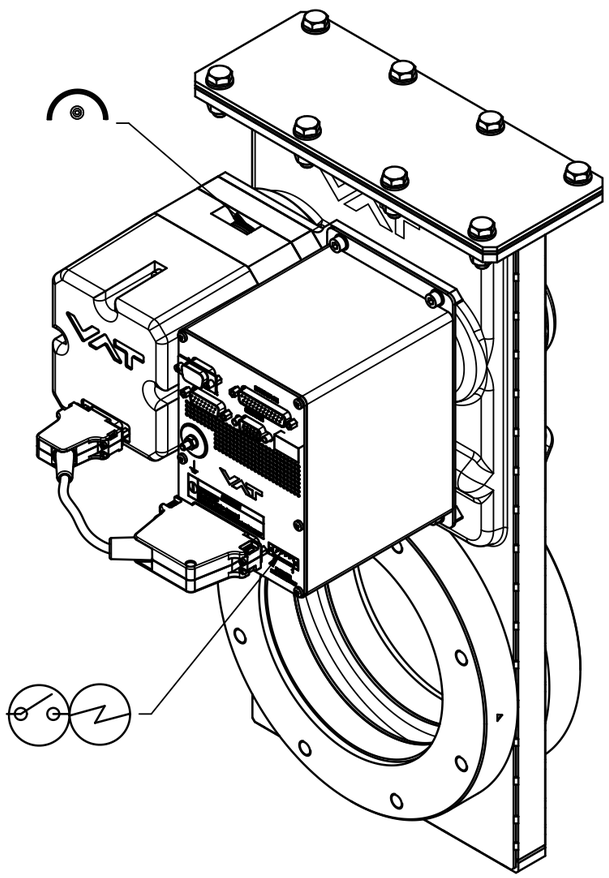

- Seat side
- Comp. air connection
- Electrical connection
- Leak detection port
- Mech. pos. indication
- Position indicator
- Required for dismantling
- Emergency actuation
- For attachment
- Bake-out area
- Differential pumping port

Control gate valve

UC-PFO / SPS / RS232 interface / 1 sensor

VAT Vakuumventile AG
CH-9469 Haag , Switzerland
Tel ++41 81 7716161 Fax ++41 81 7714830

Rev.-Date: 11.06.14
Visa: BFR

Series	Ordering No.
642	64244-PECG-0001
Projection E	DN / Flange
	160 / ISO-F
Dimensional Drawing	753537
	Rev.