This drawing is the property of VAT.

Revision

Customer number

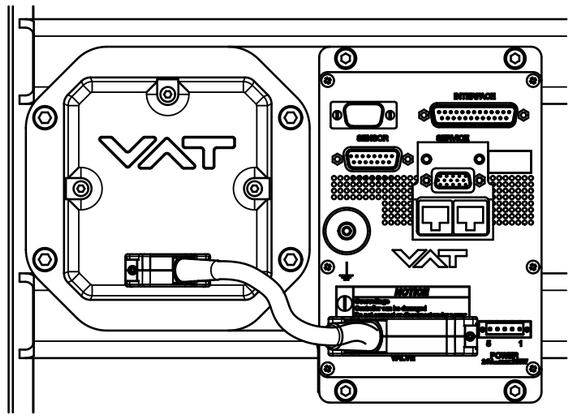

Connectors		
	Description	Type
POWER	Power input	Weidmüller SL3.5 male
SENSOR	Sensor input Sensor power supply	DB-15 female
INTERFACE	RS 232 interface	DB-25 female
Cluster	Valve Cluster connector	RJ-45 female

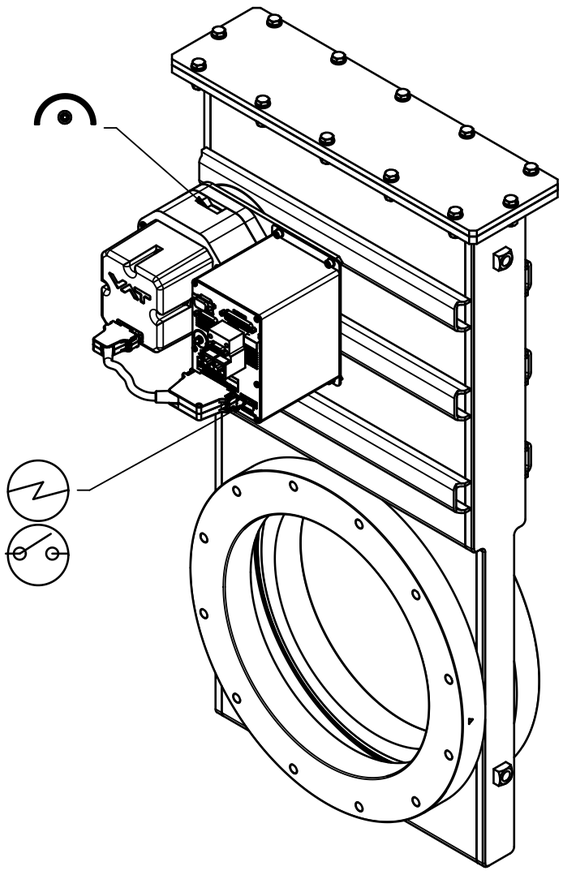

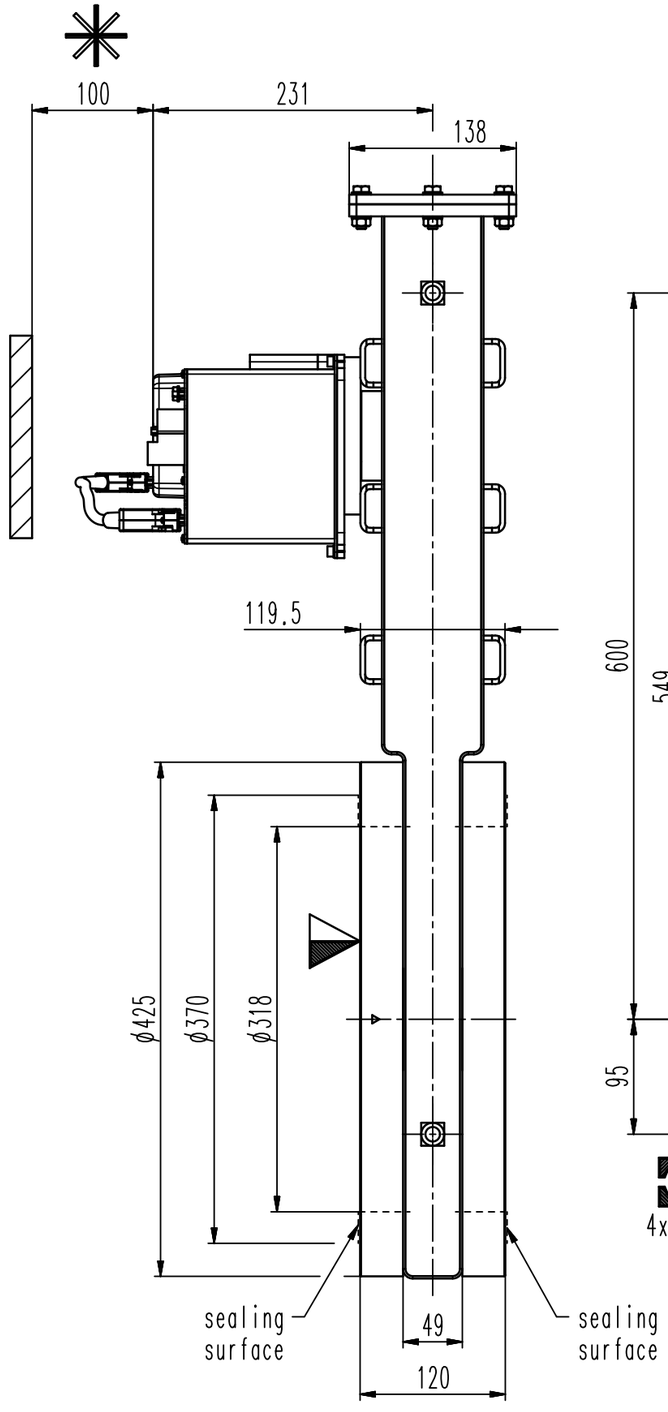

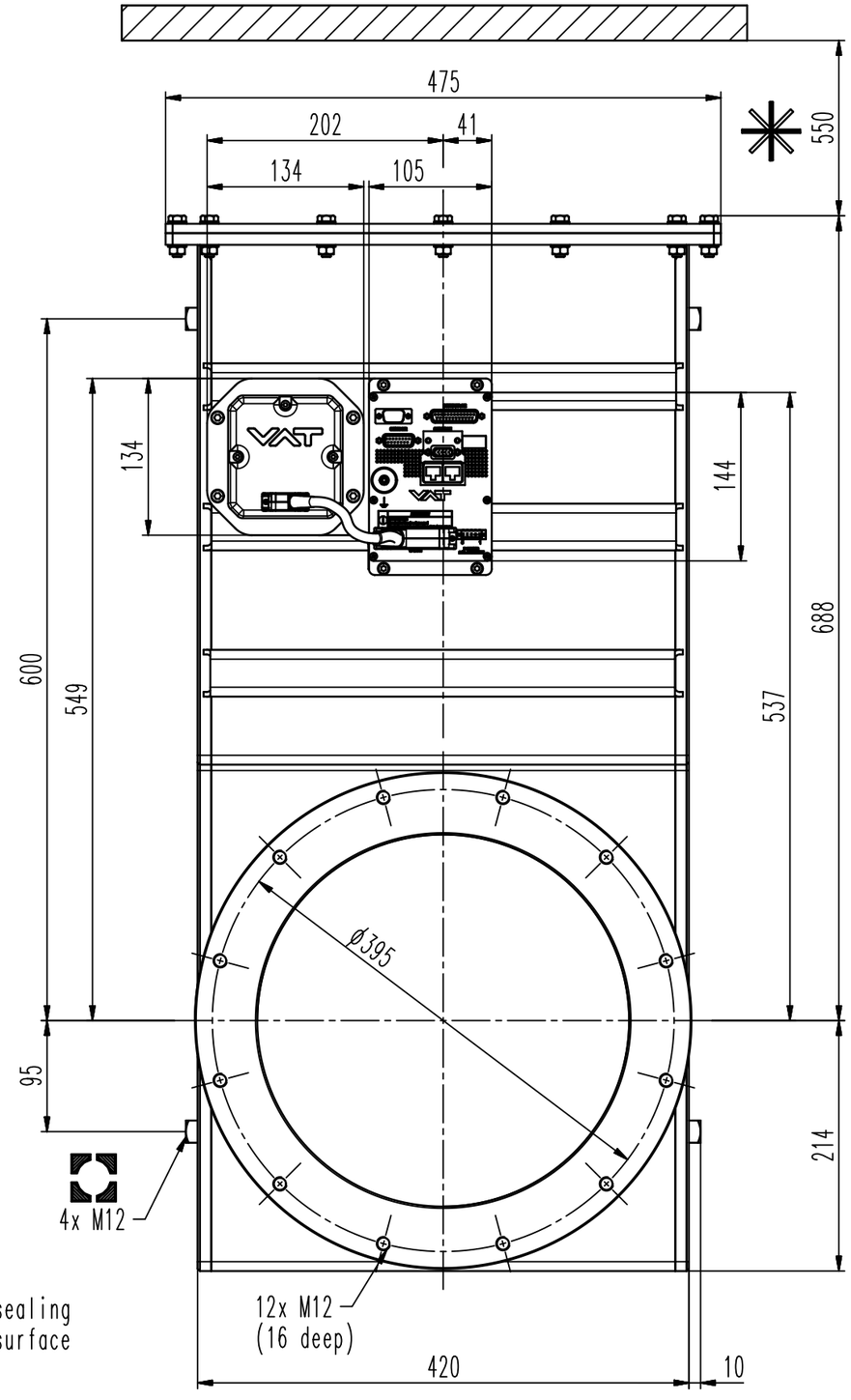

- Seat side
- Comp. air connection
- Electrical connection
- Leak detection port
- Mech. pos. indication
- Position indicator
- Required for dismantling
- Emergency actuation
- For attachment
- Bake-out area
- Differential pumping port

Control gate valve

UC-PFO / SPS / Cluster Master / RS232 interface / 2 sensors

VAT Vakuumventile AG
CH-9469 Haag , Switzerland
Tel ++41 81 7716161 Fax ++41 81 7714830

Rev.-Date: 25.03.14
Visa: BFR

Dimensional Drawing

Series	Ordering No.
642	64250-PEWH-0001

Projection E

DN	Flange
320	ISO-F

742438

Rev.