This drawing is the property of VAT.

Revision

Customer number

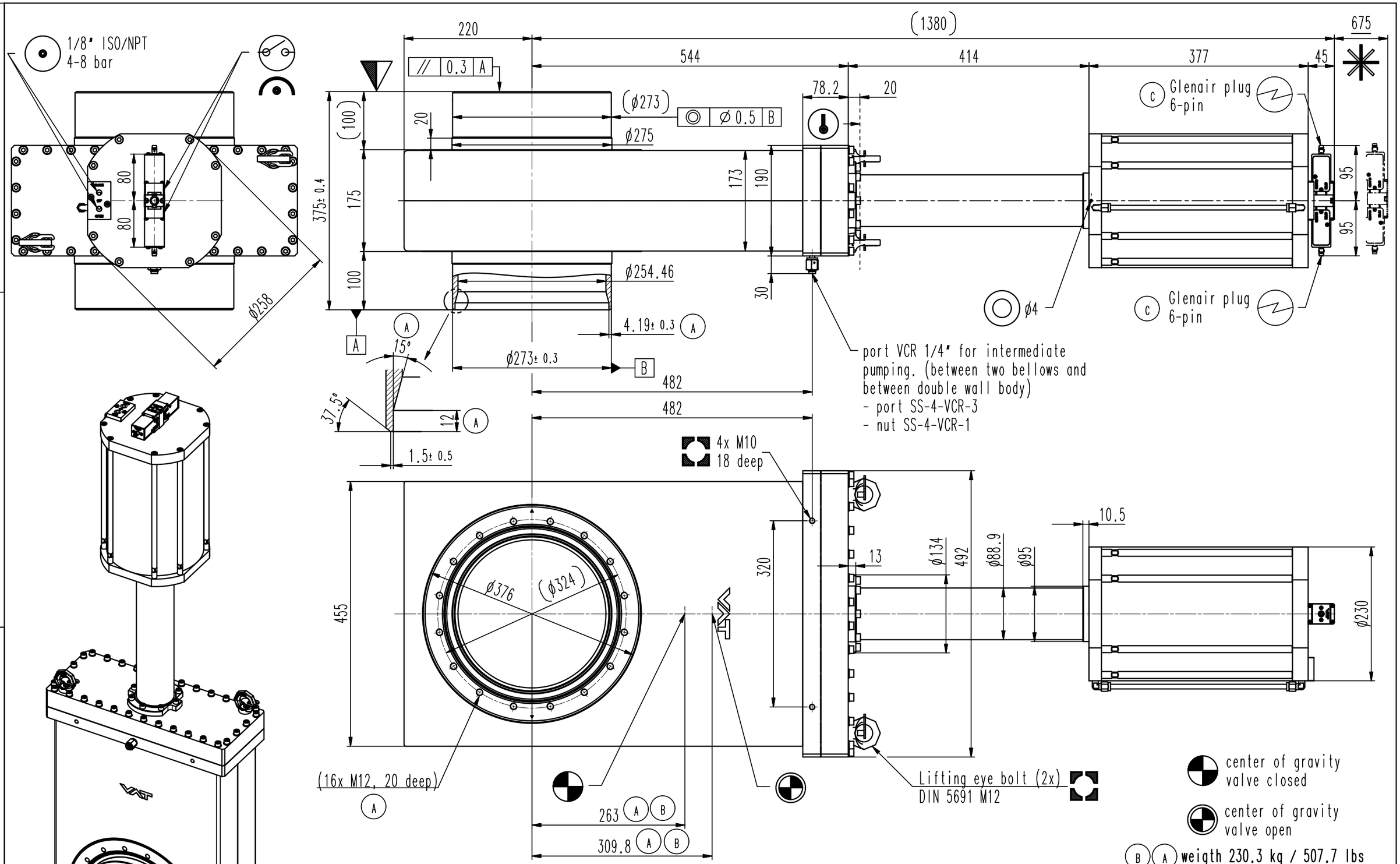

- Seat side
- Comp. air connection
- Electrical connection
- Leak detection port
- Mech. pos. indication
- Position indicator
- Required for dismantling
- Emergency actuation
- For attachment
- Bake-out area
- Differential pumping port

All-metal gate valve

product: valve typ ITER 1; flange A+B: ; weld stub flange:
Schedule No. 10S;

Series	Ordering No.
481	48148-RE24-ARG1
Projection E	DN / Flange
	250 / R

VAT Vakuumventile AG
CH-9469 Haag , Switzerland
Tel ++41 81 7716161 Fax ++41 81 7714830

Rev.-Date: 19.05.20
Visa: MAT

Dimensional Drawing

820064

Rev. C