This drawing is the property of VAT.

Customer number

Revision

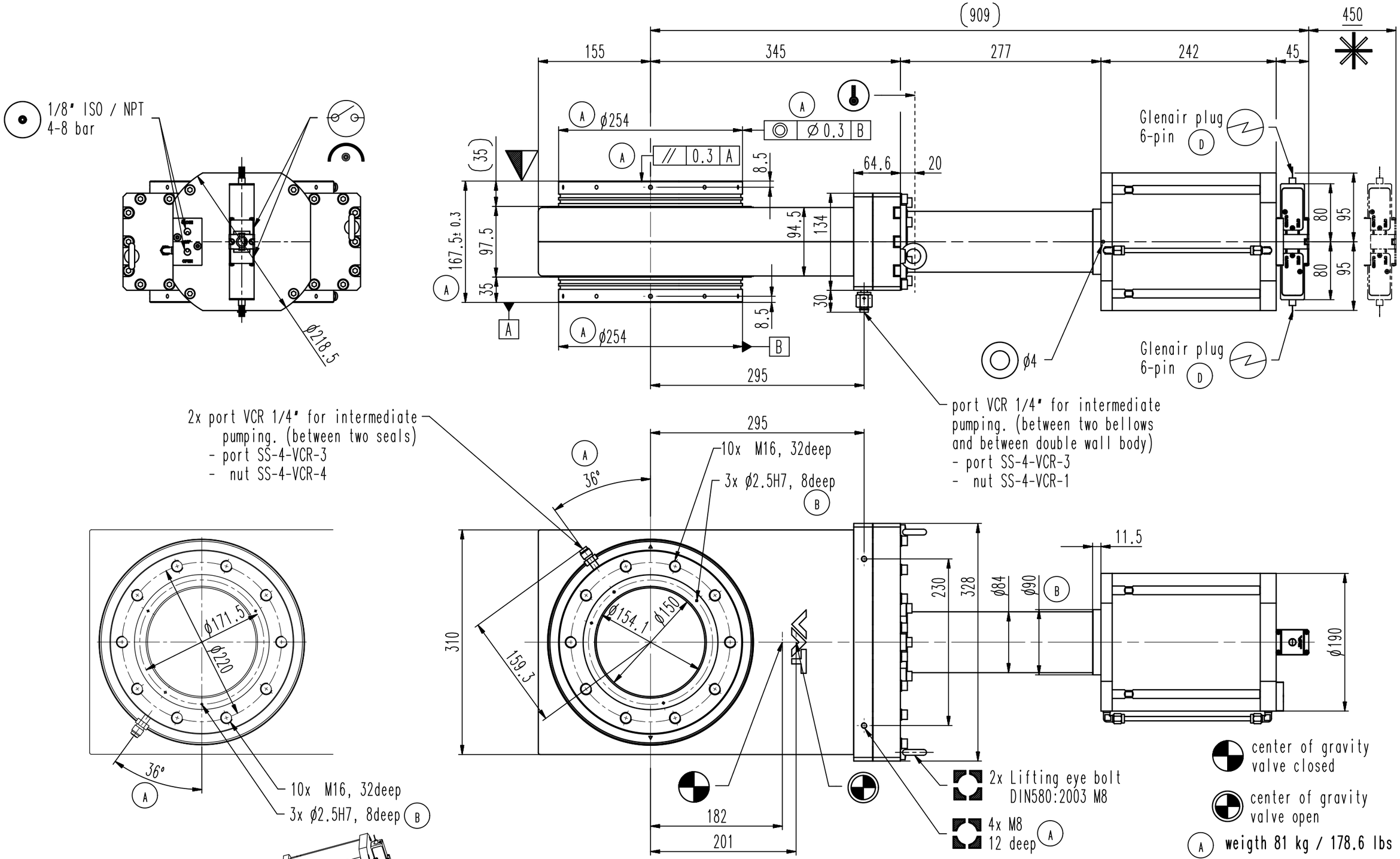

- Seat side
- Comp. air connection
- Electrical connection
- Leak detection port
- Mech. pos. indication
- Position indicator
- Required for dismantling
- Emergency actuation
- For attachment
- Bake-out area
- Differential pumping port

All-metal gate valve

product: valve typ ITER 1; flange A+B: ; type ITER;

Series	Ordering No.
482	48244-XE24-APV1

Projection E

DN	Flange
160	X

VAT Vakuumventile AG
CH-9469 Haag , Switzerland
Tel ++41 81 7716161 Fax ++41 81 7714830

Rev.-Date: 18.05.20
Visa: MAT

Dimensional Drawing

748742

Rev. D