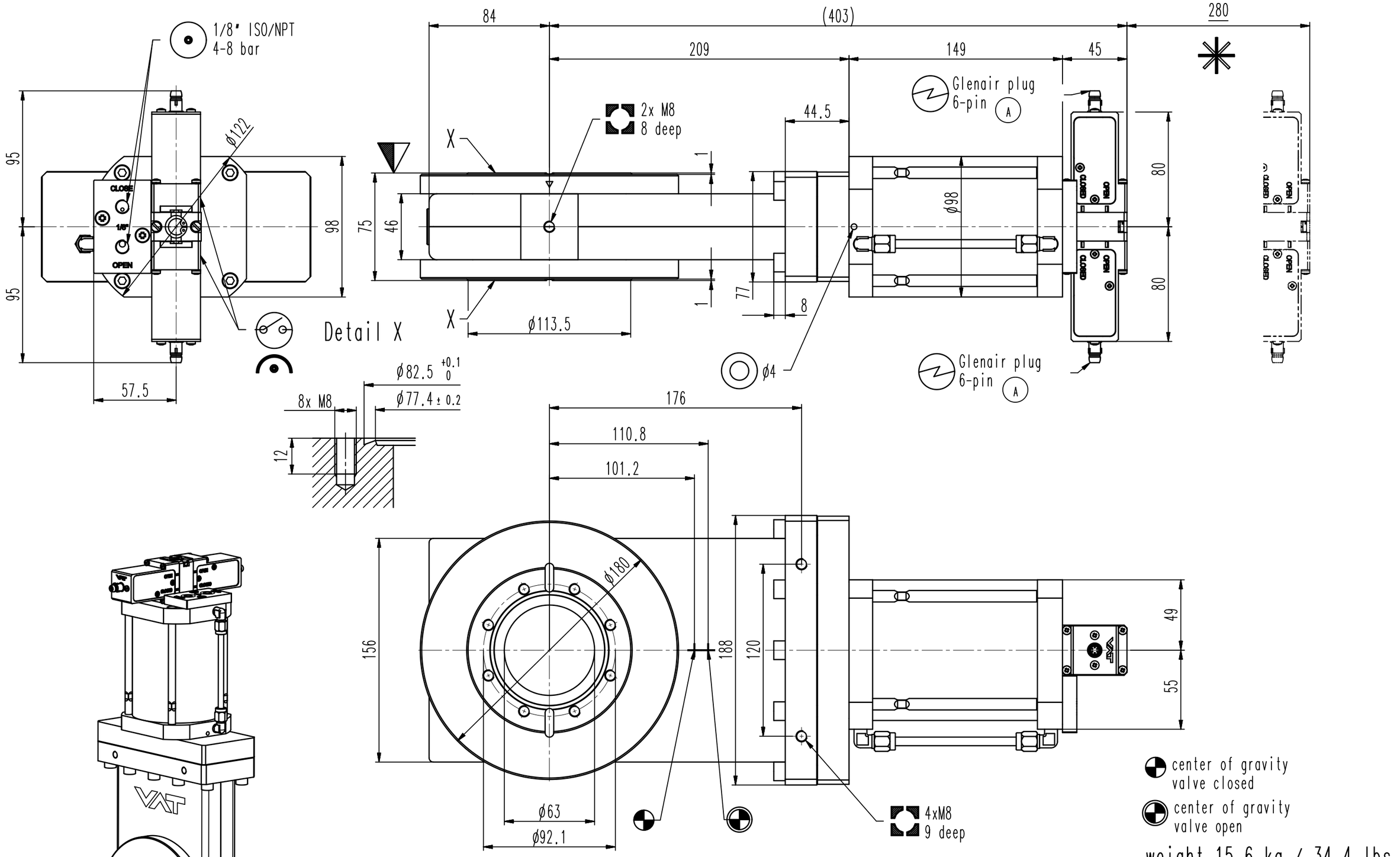

This drawing is the property of VAT.

Revision

Customer number

- Seat side
- Comp. air connection
- Electrical connection
- Leak detection port
- Mech. pos. indication
- Position indicator
- Required for dismantling
- Emergency actuation
- For attachment
- Bake-out area
- Differential pumping port

All-metal gate valve

product: valve type ITER 2;

Series	Ordering No.
482	48236-CE72-APW1

Projection E	DN	Flange
	63	CF-F m

VAT Vakuumventile AG
CH-9469 Haag , Switzerland
Tel ++41 81 7716161 Fax ++41 81 7714830

Rev.-Date: 26.05.20
Visa: MAT

Dimensional Drawing

935482

Rev. A

user ideasadm at 29.05.2020, 14:47:04
VATMDA