This drawing is the property of VAT.

Revision

Customer number

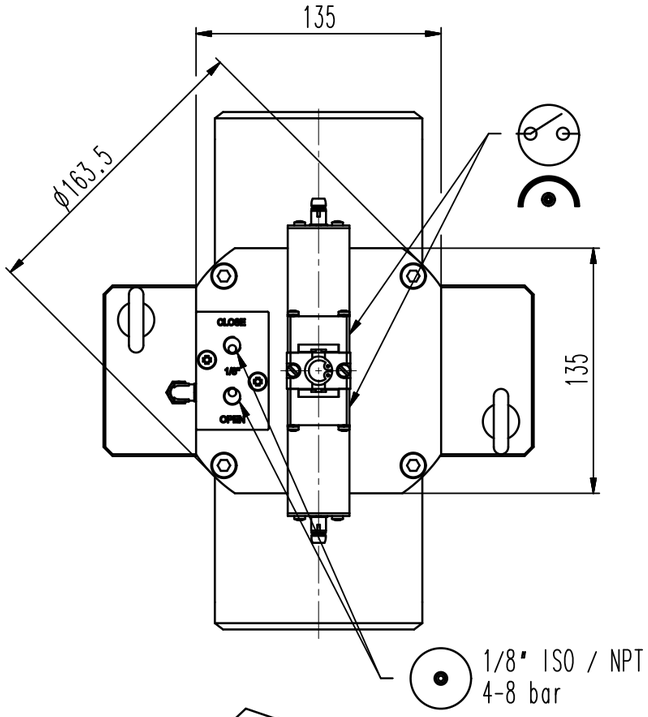


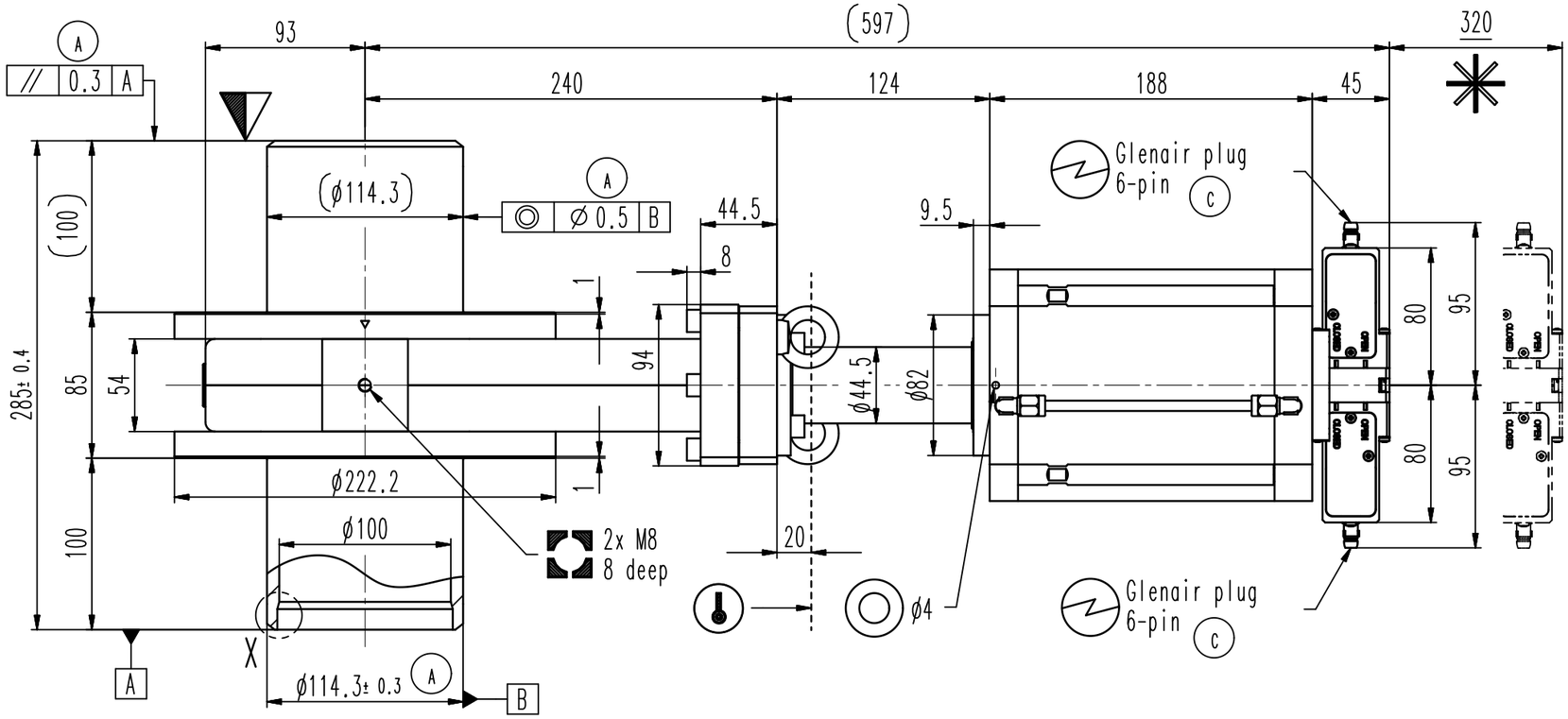


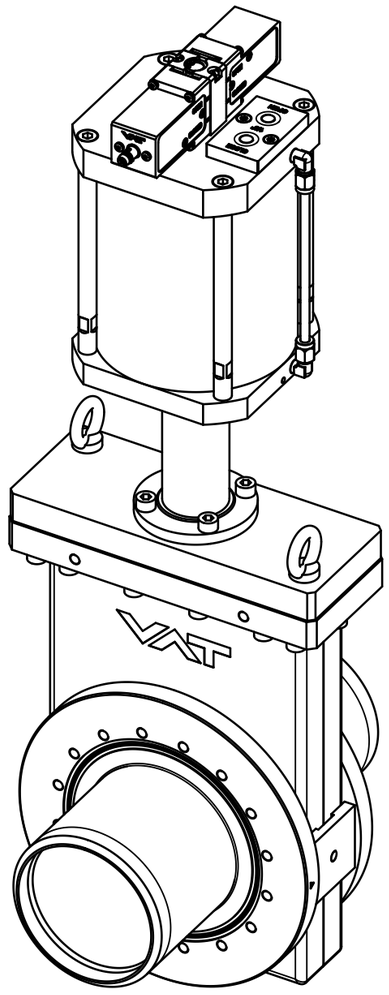

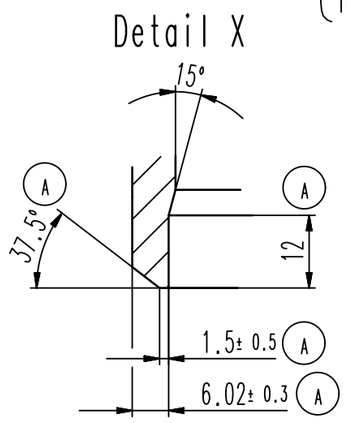


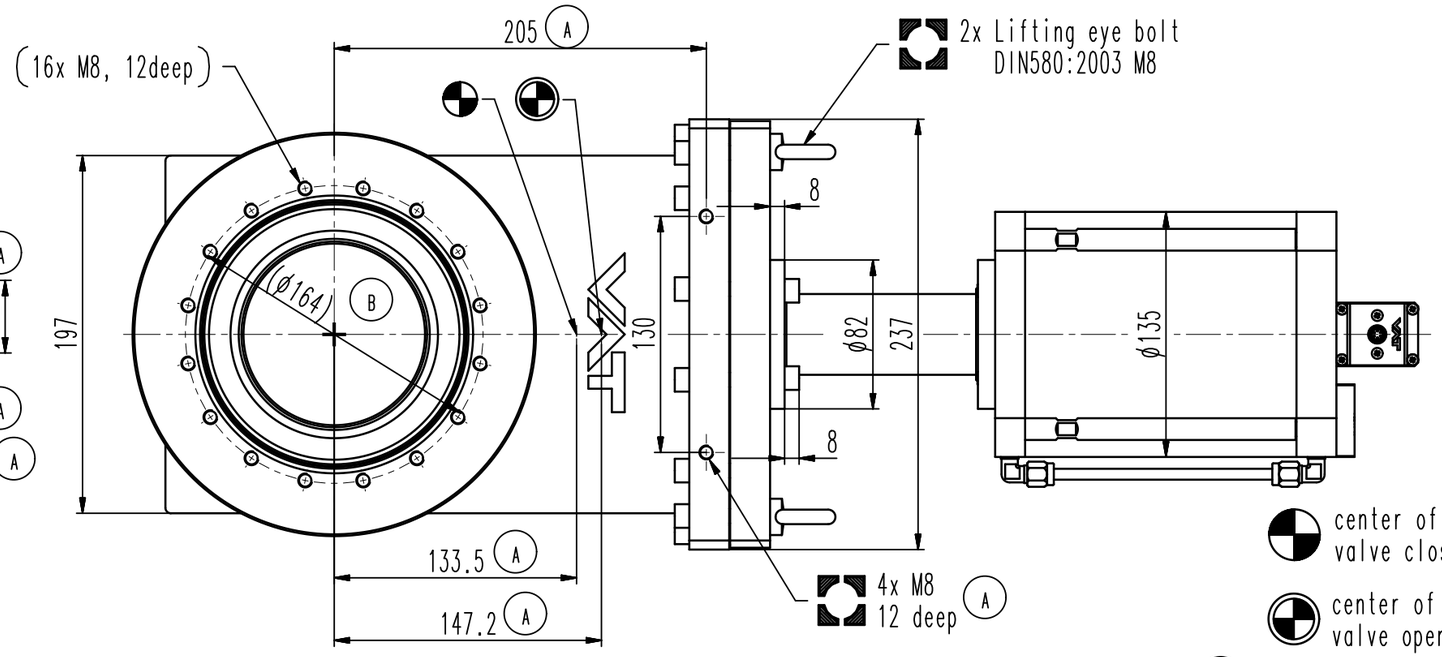


center of gravity
valve closed

center of gravity
valve open

A weigth 30.4 kg / 67.0 lbs

- Seat side
- Comp. air connection
- Electrical connection
- Leak detection port
- Mech. pos. indication
- Position indicator
- Required for dismantling
- Emergency actuation
- For attachment
- Bake-out area
- Differential pumping port

# All-metal gate valve

product: valve typ ITER 2; flange A+B: ; weld stub flange:
Scheduel No. 40S;

| | |
|---|---|
| Series | 482 |
| Ordering No. | 48240-RE24-ARL1 |
| Projection | E |
| DN | 100 |
| Flange | R |
| Rev.-Date: | 26.05.20 |
| Visa: | MAT |
| Dimensional Drawing | 749916 |
| Rev. | C |


VAT Vakuumventile AG
CH-9469 Haag , Switzerland
Tel ++41 81 7716161 Fax ++41 81 7714830