This drawing is the property of VAT.

Revision

Customer number

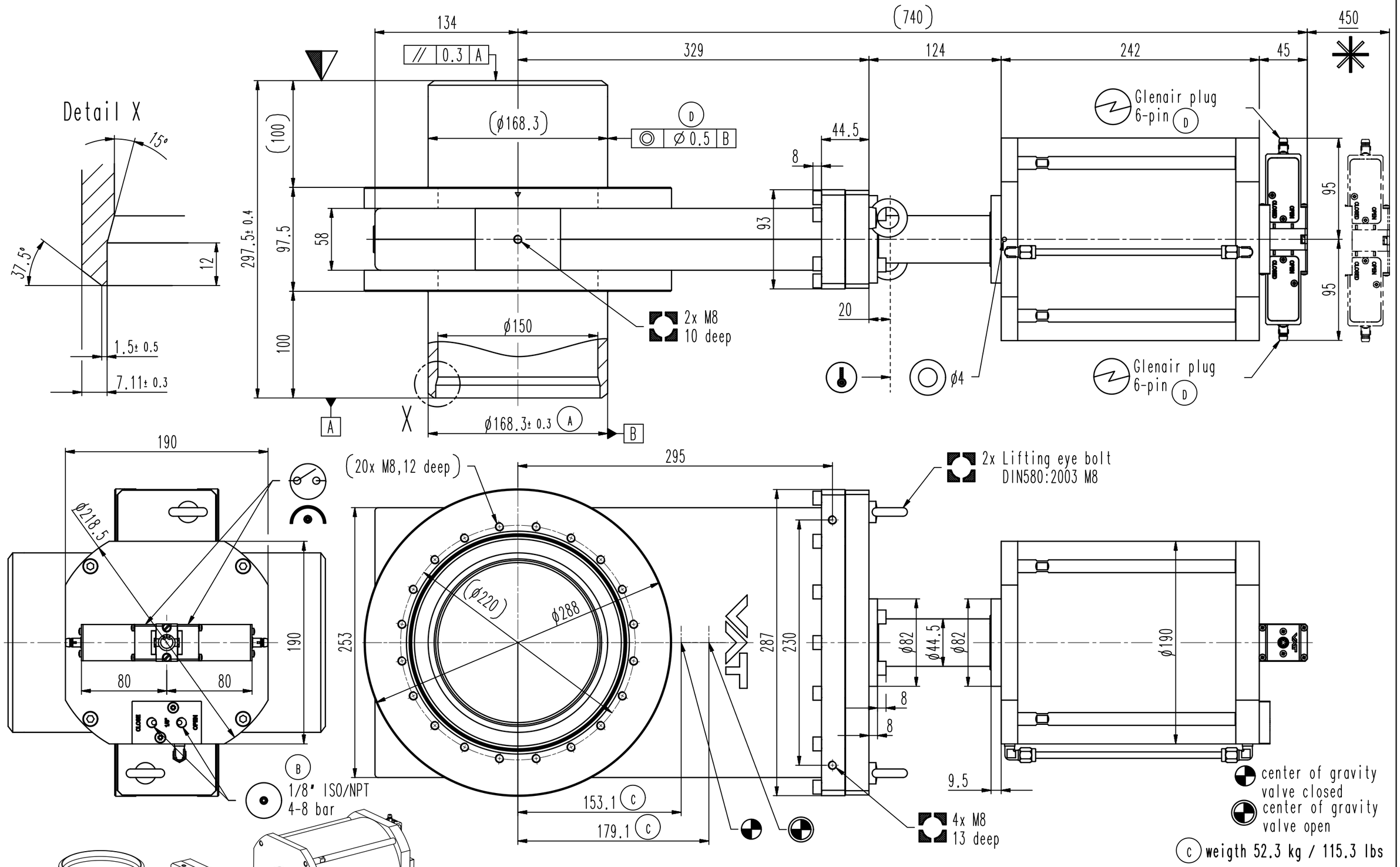

- Seat side
- Comp. air connection
- Electrical connection
- Leak detection port
- Mech. pos. indication
- Position indicator
- Required for dismantling
- Emergency actuation
- For attachment
- Bake-out area
- Differential pumping port

All-metal gate valve

product: valve typ ITER 2; flange A+B: ; weld stub flange:
Scheduel No. 40S;

Series	482
Ordering No.	48244-RE24-ARL1
Projection E	
DN	160
Flange	R
Dimensional Drawing	
	827598
Rev.	D

VAT Vakuumventile AG
CH-9469 Haag , Switzerland
Tel ++41 81 7716161 Fax ++41 81 7714830

Rev.-Date: 27.05.20
Visa: MAT