This drawing is the property of VAT.

Revision

Customer number

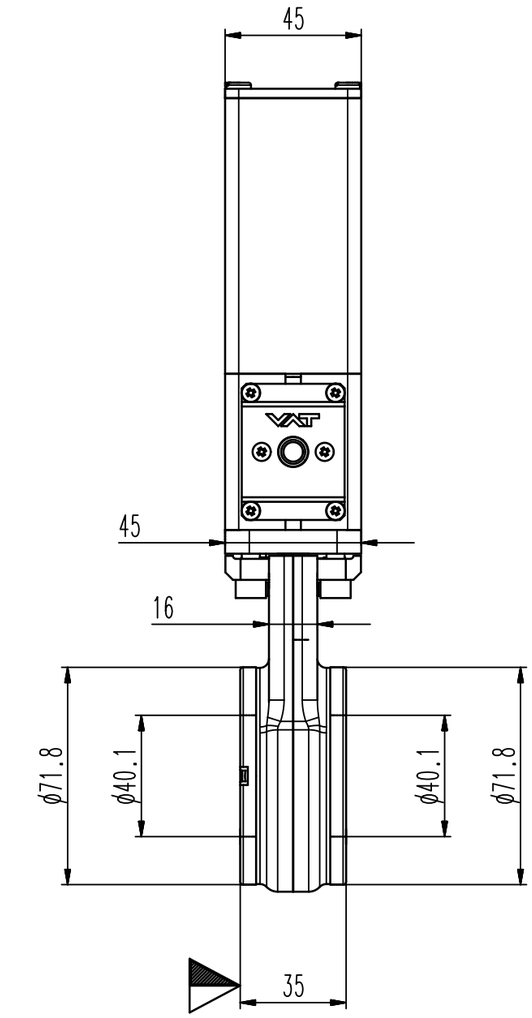

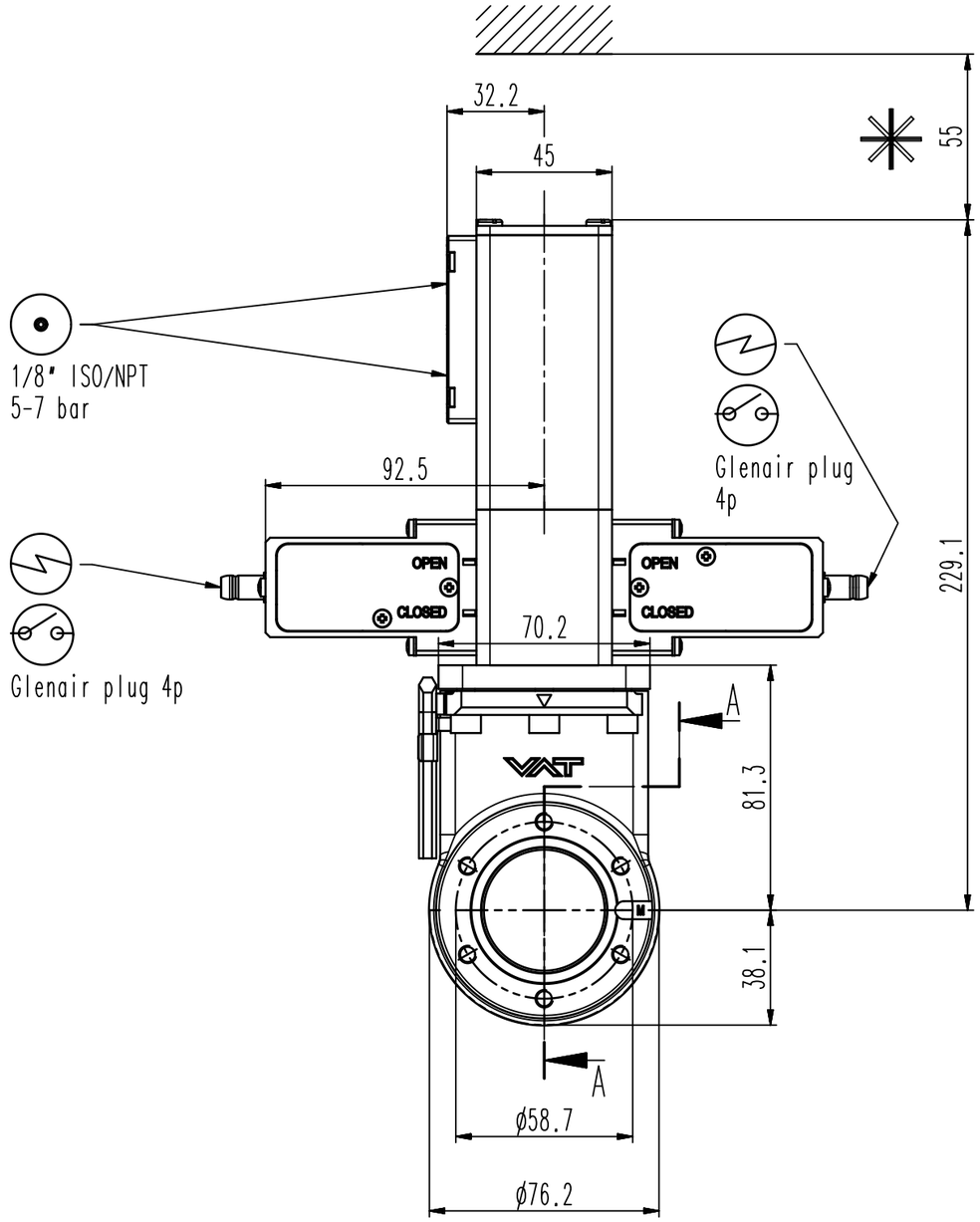

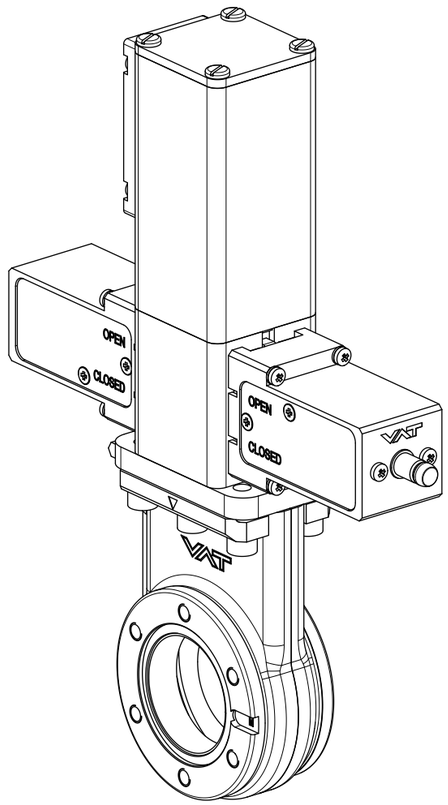

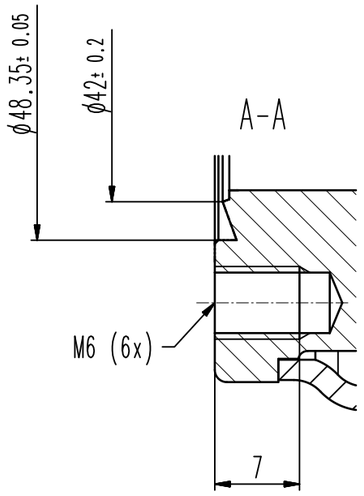

- Seat side
- Comp. air connection
- Electrical connection
- Leak detection port
- Mech. pos. indication
- Position indicator
- Required for dismantling
- Emergency actuation
- For attachment
- Bake-out area
- Differential pumping port

Mini UHV gate valve

product: valve type ITER 32;

VAT Vakuumventile AG
CH-9469 Haag , Switzerland
Tel ++41 81 7716161 Fax ++41 81 7714830

Rev.-Date: 23.06.20
Visa: WEF

Dimensional Drawing

Series	Ordering No.	
010	01032-CE24-BFS1	
Projection E	DN	Flange
	40	CF-F m
	858791	Rev. A