This drawing is the property of VAT.

Revision

Customer number

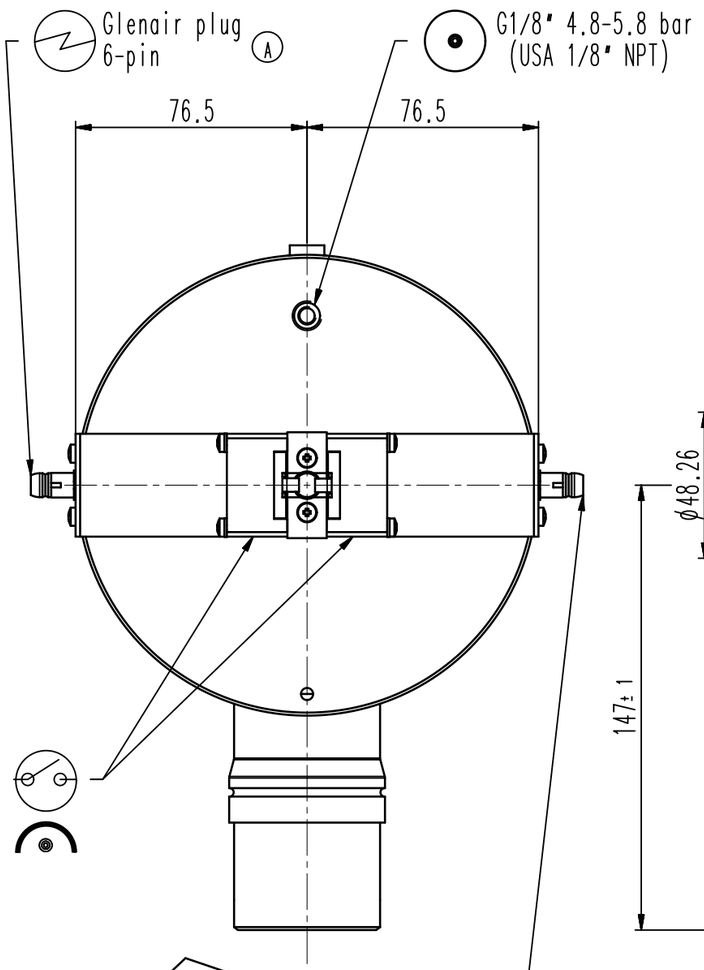

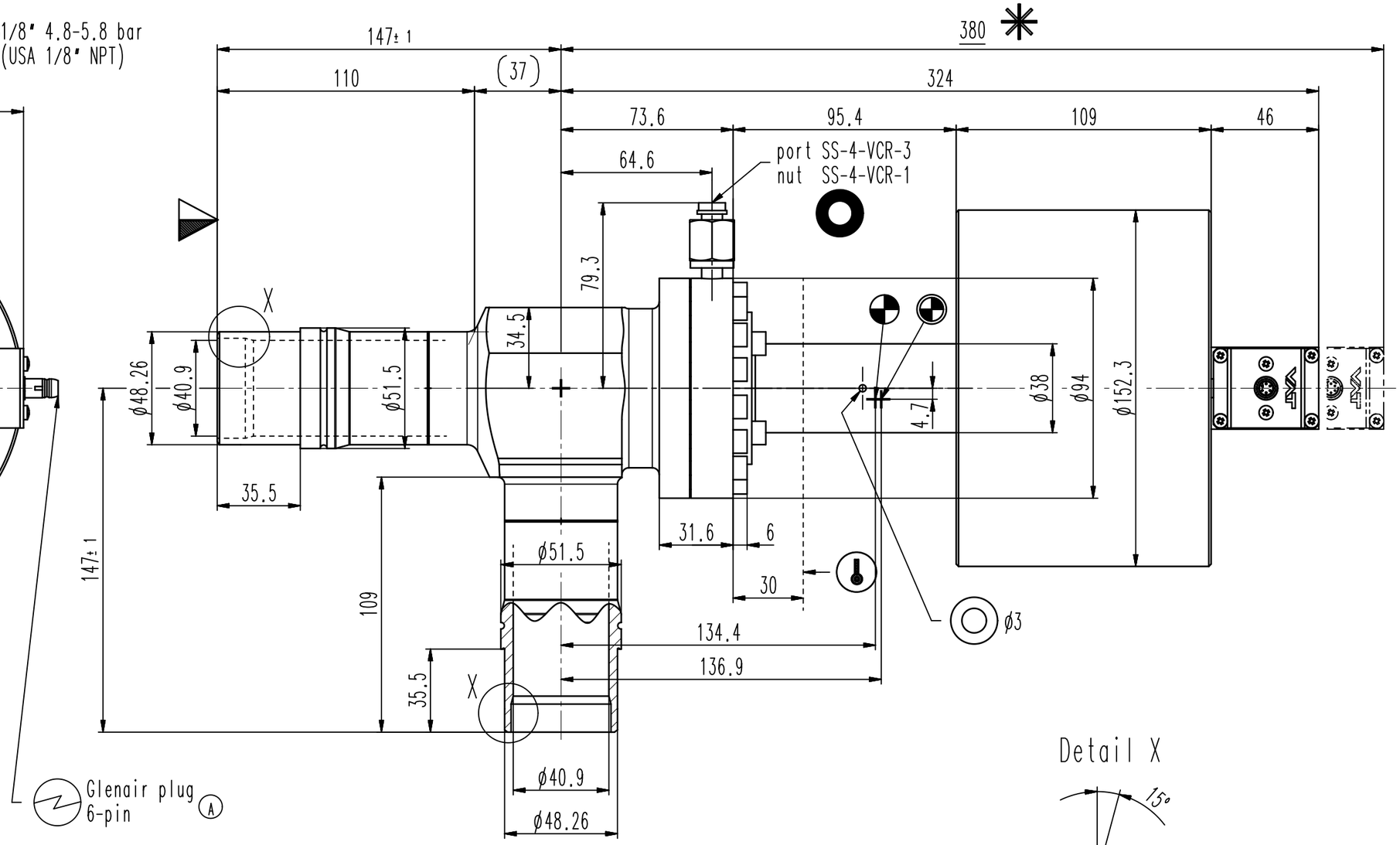

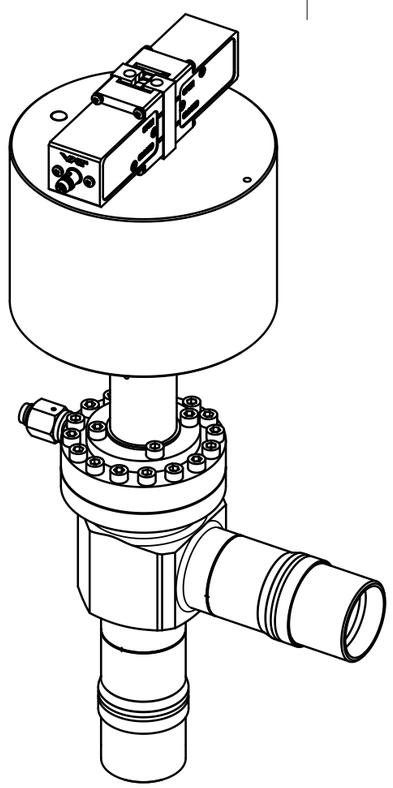

Detail X

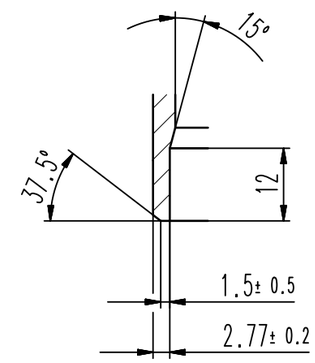

weight: 9.3 kg / 20.5 lbs

port VCR 1/4" for intermediate pumping
(between two bellows and between two head-flange-seals)

center of gravity
valve closed

center of gravity
valve open

- Seat side
- Comp. air connection
- Electrical connection
- Leak detection port
- Mech. pos. indication
- Position indicator
- Required for dismantling
- Emergency actuation
- For attachment
- Bake-out area
- Differential pumping port

All-metal angle valve

product: valve typ ITER 52; flange A+B: ; weld stub flange:
Scheduel No. 10S;

Series	Ordering No.
571	57132-RE22-AJH1
Projection E	DN / Flange
	40 / R
Dimensional Drawing	995729
	Rev. A

VAT Vakuumventile AG
CH-9469 Haag , Switzerland
Tel ++41 81 7716161 Fax ++41 81 7714830

Rev.-Date: 10.06.20
Visa: LBR